General Information

Specifications

Iele			
Suspension type			Multi link
Shock absorber	Type	Manual	ASD (Amplitude Selective Damper)
		EAS	CDC (Continuously Damping Control)
Coil spring	Free Height [I.D. color]		351.8mm [Sky - Yellow]

Rear Suspension

Item			Specification
Suspension type			Multi link
Shock absorber	Type	Manual	ASD (Amplitude Selective Damper)
		EAS	CDC (Continuously Damping Control)
Coil spring	Free Height [I.D. color]		369.1mm [Sky - White]
			341.6mm [Sky – Sky]

Wheel And Tire

Item		Specification
Wheel		6.5J × 17
		7.5J × 18
Tire		225/55 R17
		235/50 R18
Tire pressure	Front	2.2kg/cm^2(32psi)
	Rear	2.3kg/cm^2(33psi)

General Information SS-3

Wheel Alignment

Item		Specification	
		Front	Rear
Toe	Manual	0.6±1mm	2.4±1mm
	EAS	0.6±1mm	2.4±1mm
Camber angle	Manual	-0.45±0.5˚	-1.37±0.5˚
	EAS	-0.53±0.5˚	-1.43±0.5˚
Caster angle	Manual	7.53±0.5˚	-
	EAS	7.78±0.75˚	-
King-pin angle	Manual	6.9˚	-
	EAS	7.02˚	-
Side Slip		In 4.7 ~ Out 1.2 mm	In 4.7 ~ In 9.9 mm

Tightening torques

Front Suspension

Item	Tightening torque (kgf.m)		
	N.m	Kgf.m	lb-ft
Front strut assembly to front upper arm	100 ~ 120	10.0 ~ 12.0	72 ~ 87
Front upper arm to front axle	80 ~ 90	8.0 ~ 9.0	58 ~ 65
Front strut assembly to front lateral arm	140 ~ 160	14.0 ~ 16.0	101 ~ 116
Front tension arm to sub frame	140 ~ 160	14.0 ~ 16.0	101 ~ 116
Front lateral arm to sub frame	140 ~ 160	14.0 ~ 16.0	101 ~ 116
Front tension arm to front axle	90 ~ 110	9.0 ~ 11.0	65 ~ 80
Front lateral arm to front axle	90 ~ 110	9.0 ~ 11.0	65 ~ 80
Front stabilizer bar to sub frame	45 ~ 55	4.5 ~ 5.5	33 ~ 40
Front stabilizer bar to Stabilizer bar link	100 ~ 120	10.0 ~ 12.0	72 ~ 87

Rear Suspension

Item	Tightening toque		
	N.m	kgf.m	lb-ft
Hub nuts	200 ~ 280	20.0 ~ 28.0	145 ~ 203
Rear shock absorber to frame	50 ~ 65	5.0 ~ 6.5	36 ~ 47
Rear shock absorber to rear axle	140 ~ 160	14.0 ~ 16.0	101 ~ 116
Rear upper arm to frame	120 ~ 140	12.0 ~ 14.0	87 ~ 101
Rear upper arm to rear axle	80 ~ 90	8.0 ~ 9.0	58 ~ 65
Rear stabilizer bar link to rear lower arm	50 ~ 65	5.0 ~ 6.5	36 ~ 47
Rear stabilizer bar to Stabilizer bar link	50 ~ 65	5.0 ~ 6.5	36 ~ 47
Rear stabilizer bar to sub frame	45 ~ 55	4.5 ~ 5.5	33 ~ 40
Rear assist arm to rear axle	80 ~ 90	8.0 ~ 9.0	58 ~ 65
Rear assist arm to frame	100 ~ 120	10.0 ~ 12.0	72 ~ 87
Reartrailingarm to rear axle	100 ~ 120	10.0 ~ 12.0	72 ~ 87
Reartrailingarm to frame	100 ~ 120	10.0 ~ 12.0	72 ~ 87
Rear lower arm to rear axle	140 ~ 160	14.0 ~ 16.0	101 ~ 116
Rear lower arm to frame	100 ~ 120	10.0 ~ 12.0	72 ~ 87

Special Service Tools

Tool (Number and Name)	Illustration	Use
09546-26000 Strut spring compressor	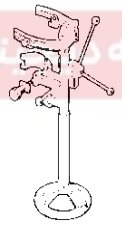 E4626000	Compression of coil spring
09568-2J100 Ball joint remover	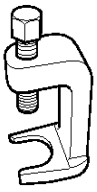 SBHSS8062D	Removal of ball joint

Troubleshooting

Trouble symptom	Probable cause	Remedy
Hard steering	Improper front wheel alignment	Repair
	Excessive turning resistance of lower arm ball joint	Replace
	Flat tire	Adjust
	No power assist	Repair or Replace
Poor return of steering wheel to center	Improper front wheel alignment	Repair
Poor ride quality	Improper front wheel alignment	Repair
	Damaged shock absorber	Repair or Replace
	Varied or damaged stabilizer	Replace
	Varied or damaged coil spring	Replace
	Worn lower arm bushing	Replace
Abnormal tire wear	Improper front wheel alignment	Repair
	Improper tire inflation pressure	Adjust
	Worn of shock absorber	Replace
Wandering	Improper front wheel alignment	Repair
	Poor turning resistance of lower arm ball joint	Repair
	Loose or worn lower arm bushing	Re-tighten or Replace
Vehicle pulls to one side	Improper front wheel alignment	Repair
	Excessive turning resistance of lower arm ball joint	Replace
	Varied or damaged coil spring	Replace
	Bent lower arm	Replace
Steering wheel shimmy	Improper front wheel alignment	Repair
	Excessive turning resistance of lower arm ball joint	Replace
	Varied or damaged stabilizer	Replace
	Worn lower arm bushing	Replace
	Worn of shock absorber	Replace
	Varied or damaged coil spring	Replace
Bottoming	Broken or worn spring	Replace
	Malfunction of shock absorber	Replace

WHEEL AND TIRE DIAGNOSIS		
Rapid wear at the center	Rapid wear at both shoulders	Wear at one shoulder
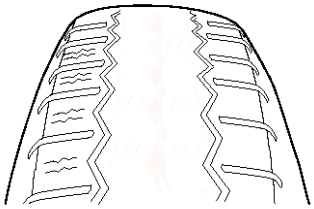	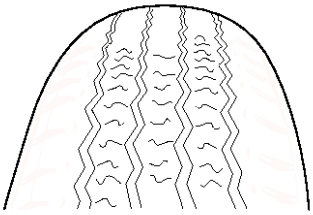	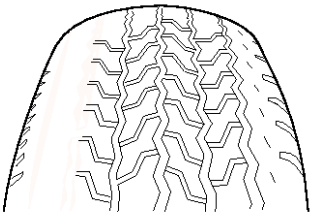
• Center-tread down to fabric due to excessive over inflated tires • Lack of rotation • Excessive toe on drive wheels • Heavy acceleration on drive	• Under-inflated tires • Worn suspension components • Excessive cornering speeds • Lack of rotation	• Toe adjustment out of specification • Camber out of specification • Damaged strut • Damaged lower arm
Partial wear	Feathered edge	Wear pattern
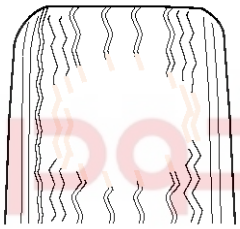	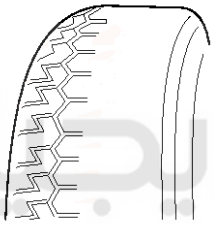	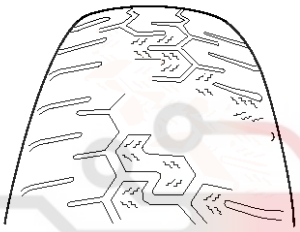
• Caused by irregular burrs on brake drums.	• Toe adjustment out of specification • Damaged or worn tie rods • Damaged knuckle	• Excessive toe on non-drive wheels • Lack of rotation

Front Suspension System

Components

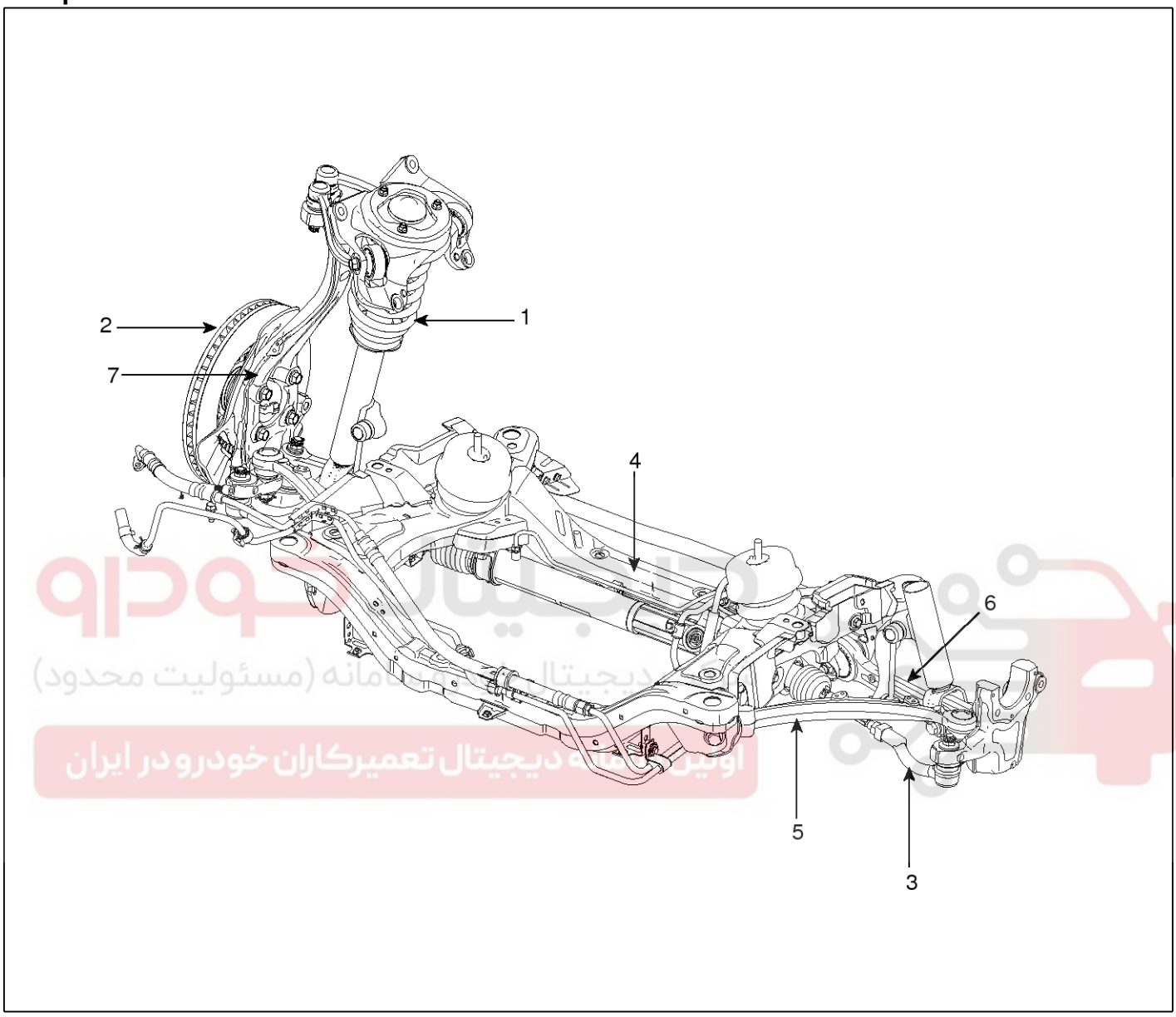

SBHSS8300D

1. Front strut assembly
2. Front brake disc
3. Tie rod end assembly
4. Front sub frame
5. Front tension arm
6. Front lateral arm
7. Front knuckle assembly

Front Strut Assembly

Components

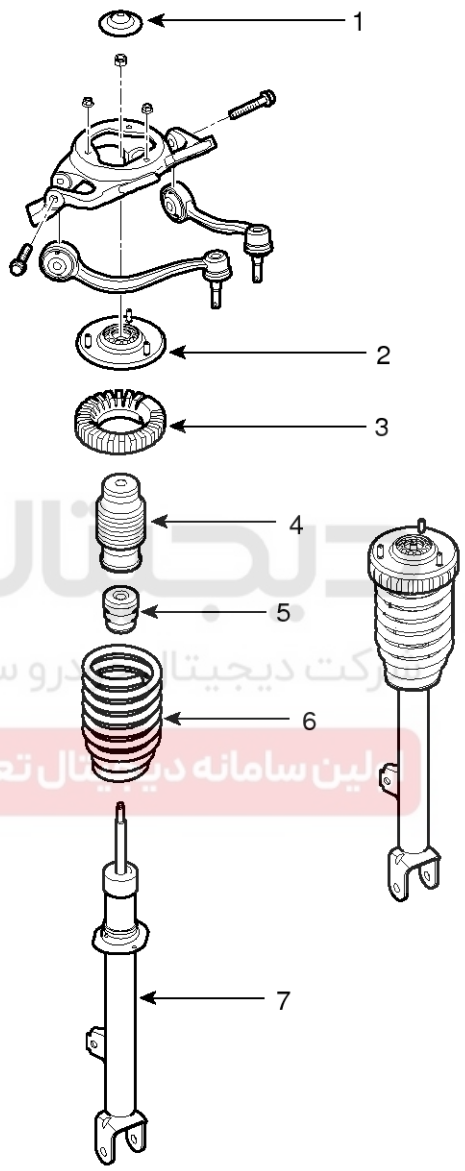

SBHSS9302N

1. Insulator cap
2. Insulator assembly
3. Spring upper pad
4. Dust cover
5. Bump stopper
6. Coil spring
7. Shock absorber

Replacement

1. Remove the front wheel & tire.

Tightening torque:
90 ~ 110N.m (9.0 ~ 11.0kgf.m, 65 ~ 80lb-ft)

2. Disconnect the stabilizer link with the front strut assembly by loosening the nuts (A).

Tightening torque:
100 ~ 120N.m (10.0 ~ 12.0kgf.m, 72 ~ 87lb-ft)

3. Disconnect the front strut assembly (C) with the front lower arm by loosening the bolt & nuts (B).

Tightening torque:
140 ~ 160N.m (14.0 ~ 16.0kgf.m, 101 ~ 116lb-ft)

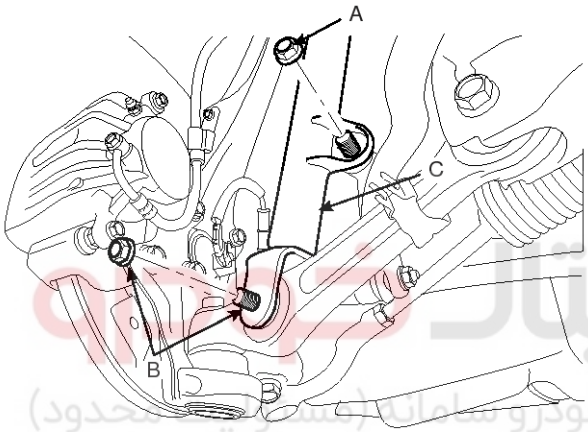

SBHSS8001D

4. Remove the split pin and castle nuts (A).

Tightening torque:
80 ~ 90N.m (8.0 ~ 9.0kgf.m, 58 ~ 65lb-ft)

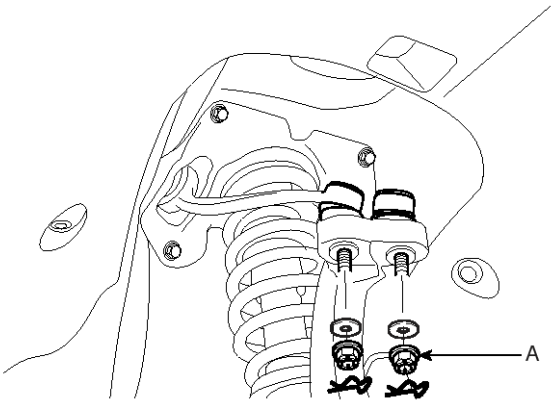

SBHSS8002D

5. Disconnect the front upper arm (A) with the knuckle using a SST (09568-2J100).

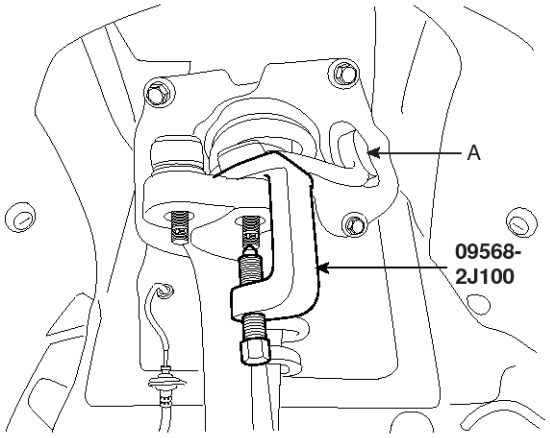

SBHSS8003D

6. Disconnect the front strut assembly with the frame by loosening the mounting bolt (A).

Tightening torque:
55 ~ 65N.m (5.5 ~ 6.5kgf.m, 40 ~ 47lb-ft)

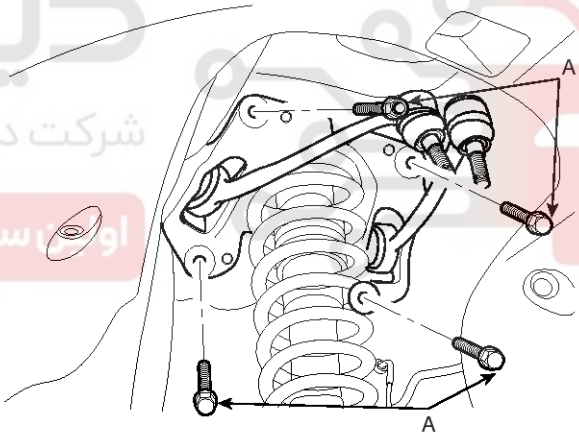

SBHSS8004D

7. Disconnect the bracket (B) with the front strut assembly (A) loosening the nuts.

Tightening torque:
20 ~ 30N.m (2.0 ~ 3.0kgf.m, 14 ~ 22lb-ft)

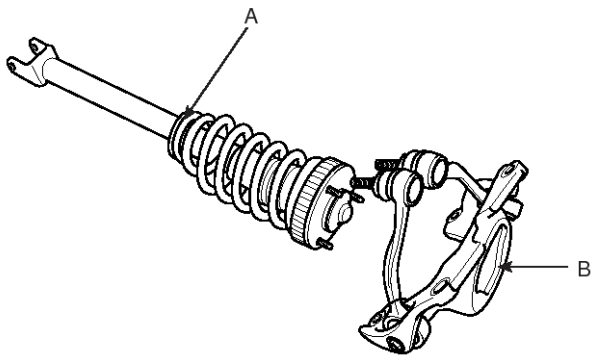

SBHSS8005D

8. Installation is the reverse of removal.

Disassembly and Reassembly

1. Compress the coil spring with a strut spring compressor. Do not compress the spring more than necessary.
2. Loosen the lock nut.

Tightening torque:
20 ~ 25N.m (2.0 ~ 2.5kgf.m, 14 ~ 18lb-ft)

3. Disassemble the components of front strut assembly in sequence.
   (Refer to Front strut assembly components.)
4. Reassembly is the reverse of the disassembly.
5. Keep in mind in strut assembly installing angle.

Inspection

1. Check the components for damage or deformation.
2. Compress and extend the piston rod and check that there is no abnormal resistance or unusual sound during operation.
3. When disposing the shock absorber, fully extend the piston rod (A) and then drill a hole on the B section to discharge gas from the cylinder.

⚠CAUTION
The gas coming out is harmless, but be careful of chips that may fly when drilling. Be sure to wear safety goggles or eye protection when performing this task.

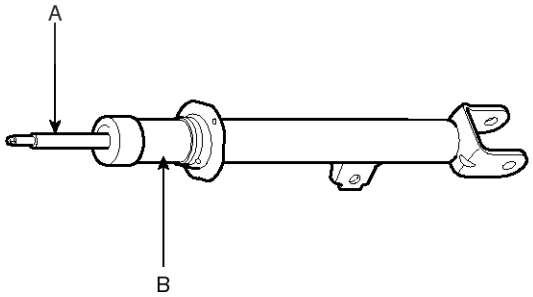

SBHSS8303D

Front Upper Arm

Replacement

1. Remove the front wheel & tire.

Tightening torque:
90 ~ 110 N.m(9.0 ~ 11.0kgf.m, 65 ~ 80lb-ft)

2. Remove the front assembly.
   (Refer to front strut assembly.)
3. Disconnect the front upper arm (A) with the front strut assembly bracket (B) by loosening the bolt.

Tightening torque:
100 ~ 120N.m (10.0 ~ 12.0kgf.m, 72 ~ 87lb-ft)

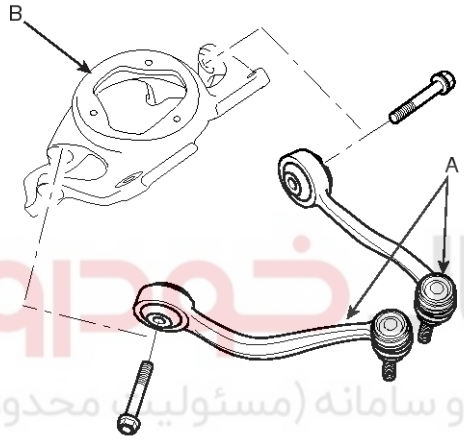

SBHSS8006D

4. Installation is the reverse of removal.

⚠CAUTION
Keep mind in upper arm installing angle.

Inspection

1. Check the bushing for wear and deterioration.
2. Check the ball joint for rotating torque.

Front Lower Arm

Replacement

Replacement the lateral arm.

1. Remove the front wheel & tire.

Tightening torque:
90 ~ 110N.m (9.0 ~ 11.0kgf.m, 65 ~ 80)

2. Loosen the flange bolt & lock nuts.

Tightening torque:
140 ~ 160N.m (14.0 ~ 16.0kgf.m, 101 ~ 116lb-ft)

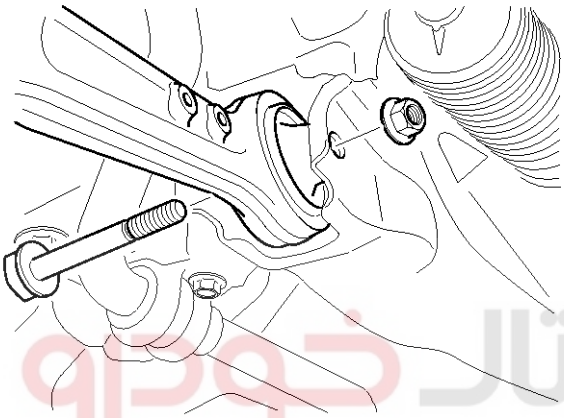

SBHSS8066D

3. Disconnect the lateral arm (C) with the front strut assembly (D) by loosening the flange bolts (A) & lock nuts (B).

Tightening torque:
140 ~ 160N.m (14.0 ~ 16.0kgf.m, 101 ~ 116lb-ft)

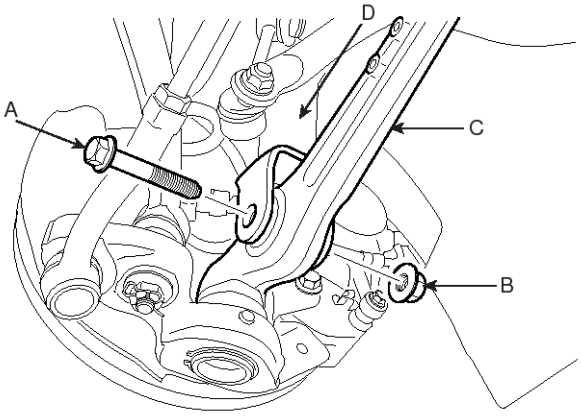

SBHSS8067D

⚠CAUTION
Do not use the lock nuts again.

4. Remove the split pin and castle nuts.

Tightening torque:
90 ~ 110N.m (9.0 ~ 11.0kgf.m, 65 ~ 80)

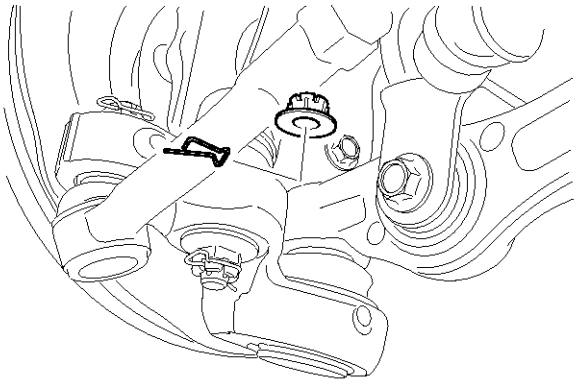

SBHSS8068D

5. Disconnect the lateral arm (A) with the front knuckle using a SST (09568-2J100).

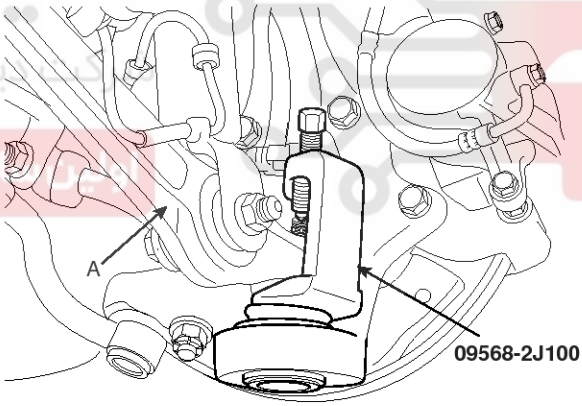

SBHSS8010D

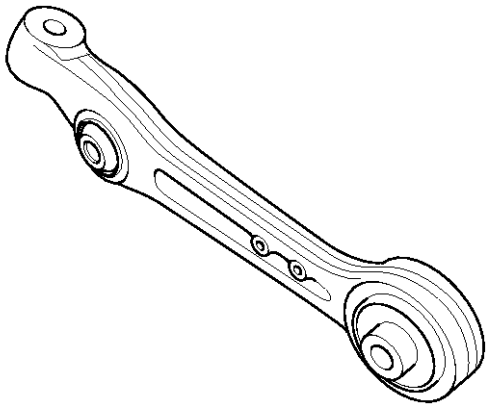

SBHSS8011D

Replacement the tension arm.

1. Remove the split pin and castle nuts.

Tightening torque

Tie rod : 90 ~ 110N.m (9.0 ~ 11.0kgf.m, 65 ~ 80lb-ft)
Tension arm : 90 ~ 110N.m (9.0 ~ 11.0kgf.m, 65 ~ 80lb-ft)

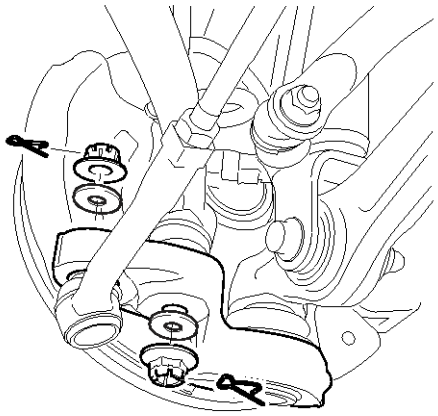

SBHSS9303N

2. Disconnect the tension arm (A) with the front knuckle using a SST (09568-2J100).

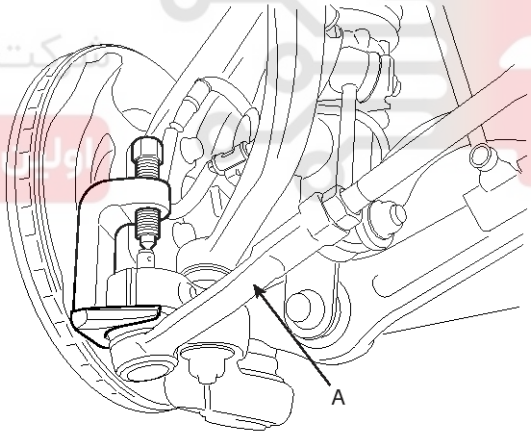

SBHSS8094D

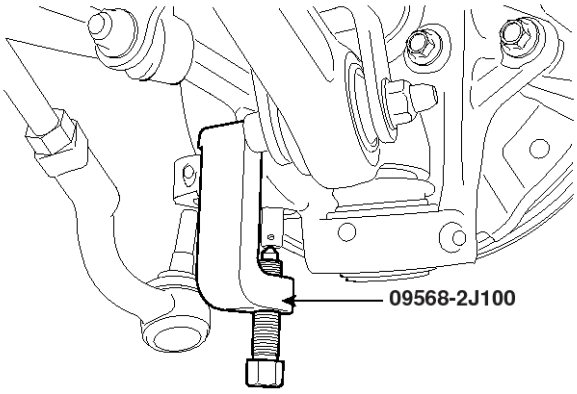

SBHSS8070D

3. Disconnect the tension arm (A) with the frame by loosening the flange bolts & lock nuts.

Tightening torque:
140 ~ 160N.m (14.0 ~ 16.0kgf.m, 101 ~ 116lb-ft)

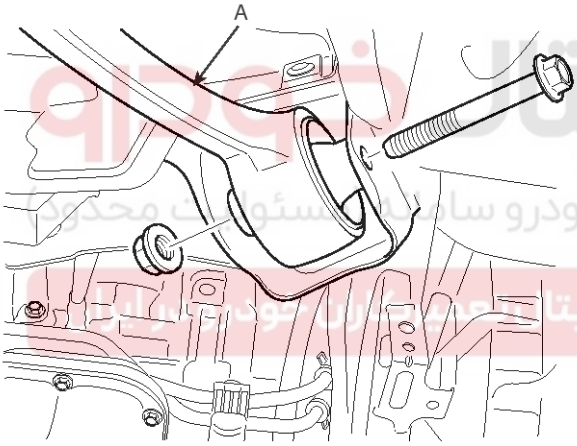

SBHSS8071D

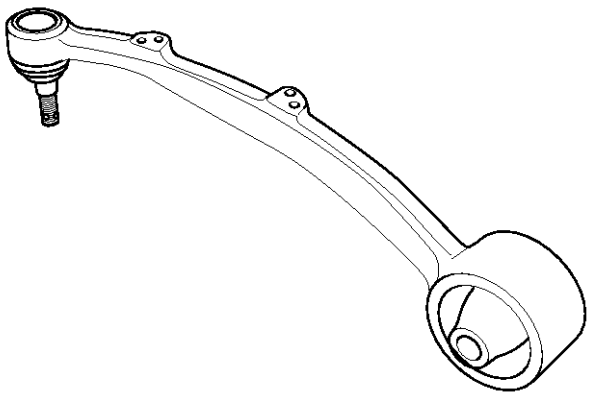

SBHSS8016D

4. Installation is the reverse of removal.

Inspection

1. Check the bushing for wear and deterioration.
2. Check the ball joint for rotating torque.
3. Chech the lower arm for deformation.
4. Check the all bolts.

Front Stabilizer Bar

Replacement

1. Disconnect the stabilizer link (B) with the front strut assembly by loosening the nuts (A).

Tightening torque:
100 ~ 120N.m (10.0 ~ 12.0kgf.m, 72 ~ 87lb-ft)

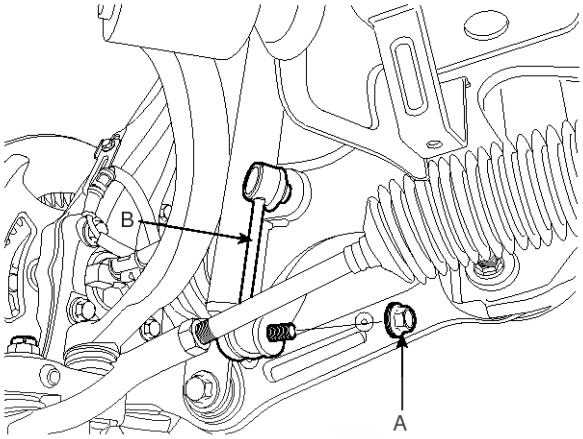

SBHSS8072D

2. Disconnect the stabilizer bar with the frame by loosening the bolts (A).

Tightening torque:
45 ~ 55N.m (4.5 ~ 5.5kgf.m, 33 ~ 40lb-ft)

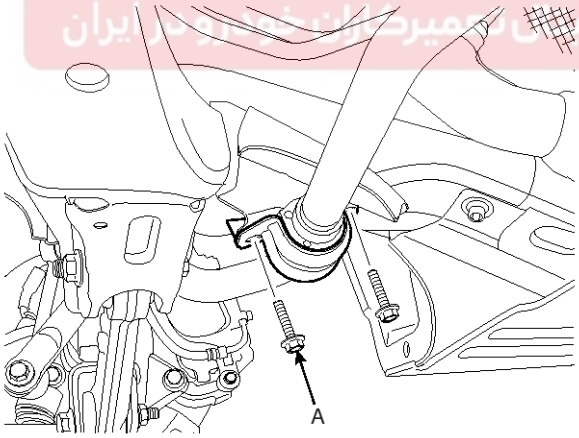

SBHSS8073D

3. Remove the stabilizer link (A), clamp (B), bushing (C).

Tightening torque:
100 ~ 120N.m (10.0 ~ 12.0kgf.m, 72 ~ 87lb-ft)

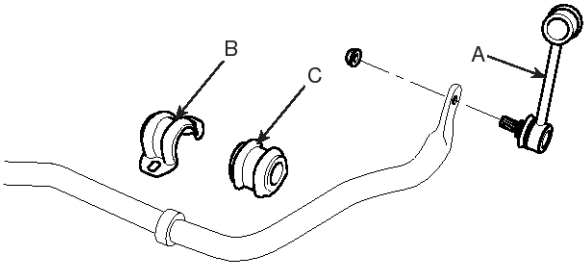

SBHSS8019D

4. Installation is the reverse of removal.

CAUTION
Do not use the lock nuts again.

Inspection

1. Check the bushing for wear and deterioration.
2. Check the ball joint for rotating torque.

Rear Suspension System

Components

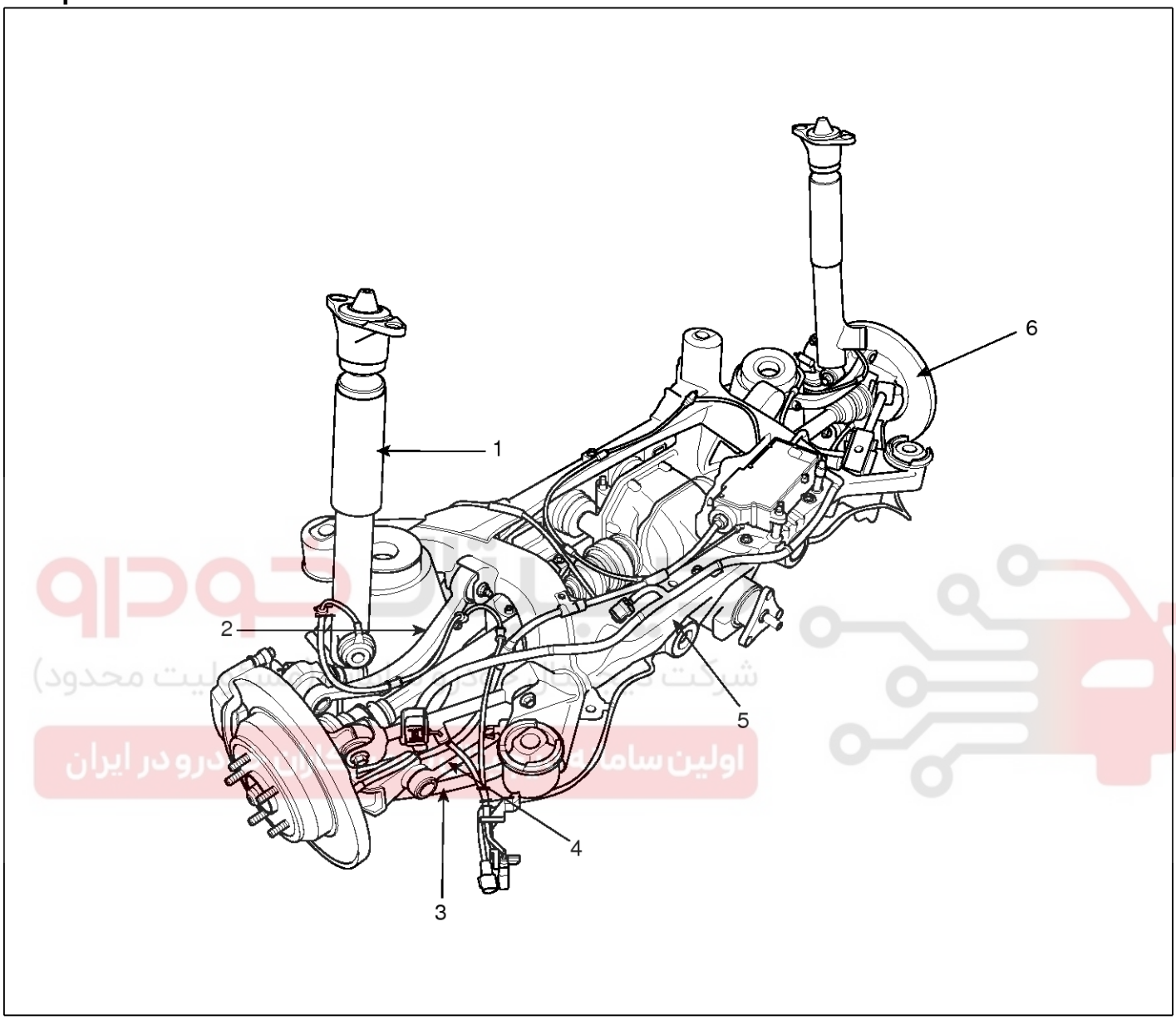

SBHSS8304D

1. Rear shock absorber
2. Rear upper arm
3. Rear trailing arm
4. Rear Assist arm
5. Rear sub frame
6. Rear disk

Rear Shock Absorber

Components

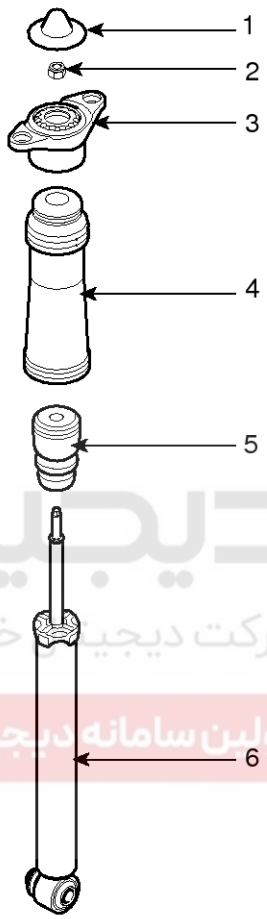

SBHSS8305D

1. Insulator cap
2. Lock nuts
3. Bracket assembly
4. Dust cover
5. Bumper stopper
6. Shock absorber

Replacement

1. Remove the rear wheel & tire.

Tightening torque:
90 ~ 110N.m (9.0 ~ 11.0kgf.m, 65 ~ 80lb-ft)

2. Support the lower portion of the rear axle with a jack securely.
3. Disconnect the rear carrier with the rear shock absorber by loosening the bolts (A).

Tightening torque:
140 ~ 160N.m (14.0 ~ 16.0kgf.m, 101 ~ 116lb-ft)

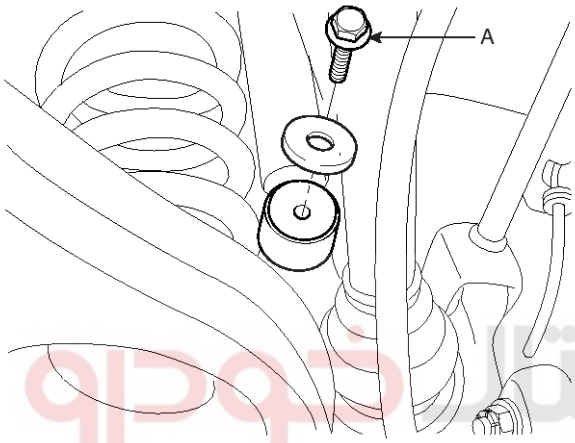

SBHSS8020D

4. Disconnect the rear shock absorber (A) with the wheel housing panel by loosening the mounting bolts.

Tightening torque:
50 ~ 65N.m (5.0 ~ 6.5kgf.m, 36 ~ 47lb-ft)

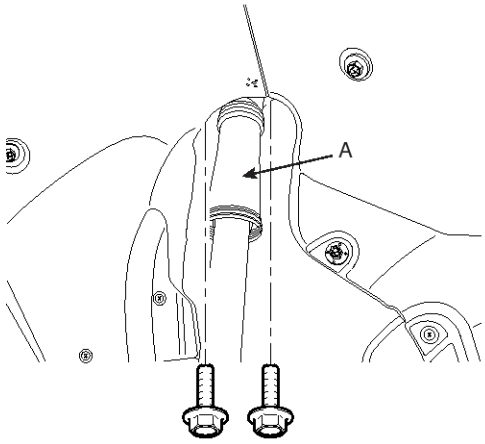

SBHSS8021D

5. Installation is the reverse of removal.

Inspection

1. Check the components for damage or deformation.
2. Compress and extend the piston rod and check that there is no abnormal resistance or unusual sound during operation.
3. When disposing the shock absorber, fully extend the piston rod (A) and then drill a hole on the (B) section to discharge gas from the cylinder.

⚠CAUTION
The gas coming out is harmless, but be careful of chips that may fly when drilling. Be sure to wear safety goggles or eye protection when performing this task.

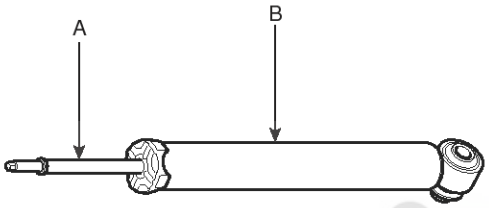

SBHSS8306D

Rear Upper Arm

Replacement

1. Remove the rear wheel & tire.

Tightening torque:
90 ~ 110N.m (9.0 ~ 11.0kgf,m, 65 ~ 80lb-ft)

2. Support the lower portion of the rear axle with a jack securely.
3. Remove the split pin and castle nuts (A).

Tightening torque:
80 ~ 90N.m (8.0 ~ 9.0kgf.m, 58 ~ 65lb-ft)

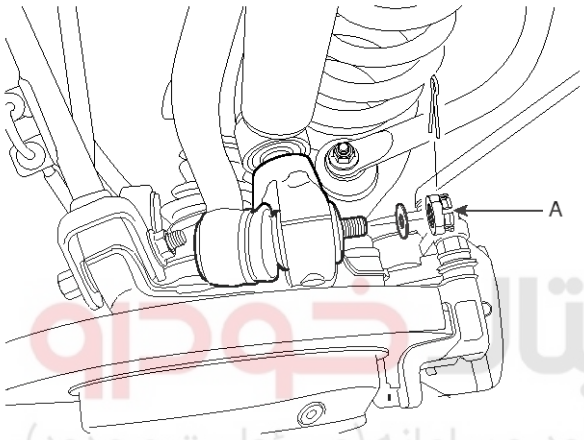

SBHSS8074D

4. Disconnect the rear upper arm (A) with the rear carrier using a SST (09568-2J100).

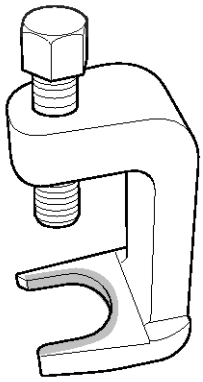

SBHSS8307D

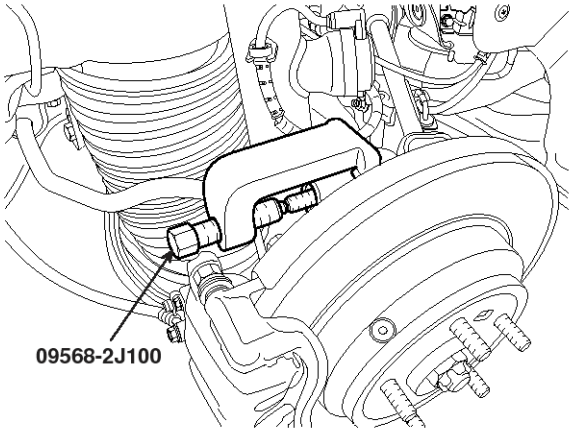

SBHSS8023D

5. Loosen the flange bolt & lock nuts.

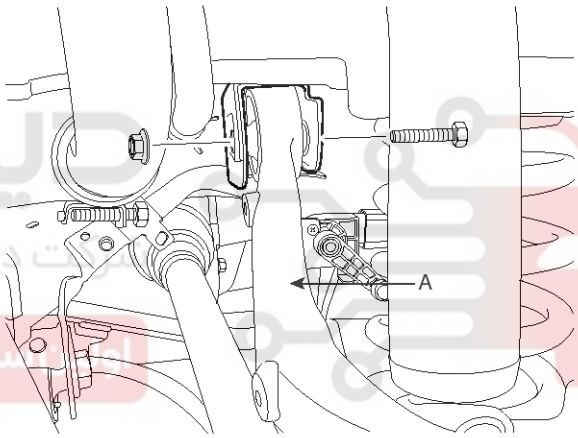

SBHSS8075D

6. Installation is the reverse of removal.

⚠CAUTION
Do not use the lock nuts again.

Inspection

1. Check the bushing for wear and deterioration.
2. Check the ball joint for rotating torque.

Rear Assist Arm

Replacement

1. Remove the rear wheel & tire.

Tightening torque:
90 ~ 110N.m (9.0 ~ 11.0kgf.m, 65 ~ 80lb-ft)

2. Remove the split pin and castle nuts.

Tightening torque:
80 ~ 90N.m (8.0 ~ 9.0kgf.m, 58 ~ 65lb-ft)

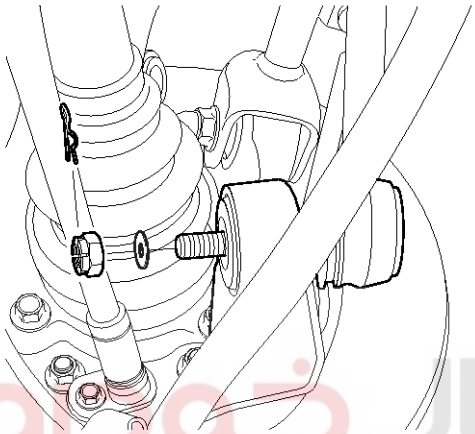

SBHSS8076D

3. Disconnect the rear assist arm with the rear carrier using a SST (09568-2J100).

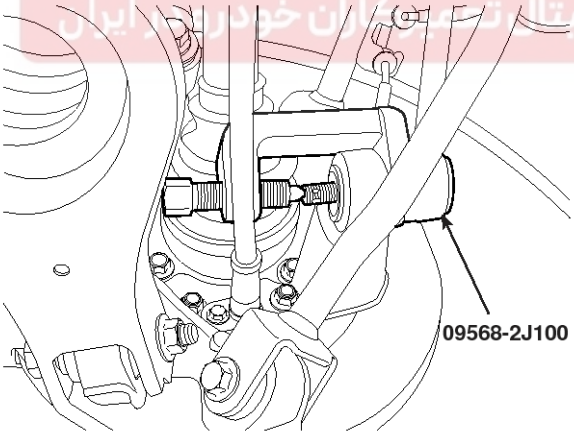

SBHSS8077D

4. Loosen the bolt & lock nuts.

Tightening torque:
100 ~ 120N.m (10.0 ~ 12.0kgf.m, 72 ~ 87lb-ft)

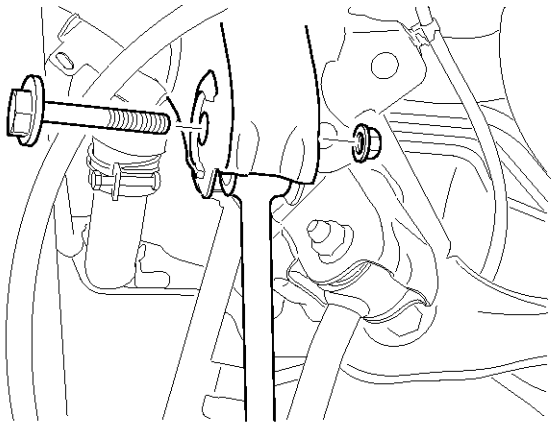

SBHSS8078D

5. Installation is the reverse of removal.

Inspection

1. Check the bushing for wear and deterioration.
2. Check the ball joint for rotating torque.
3. Check the assist arm for deformation.

Trailing Arm

Replacement

1. Remove the rear wheel & tire.

Tightening torque:
90 ~ 110N.m (9.0 ~ 11.0kgf.m, 65 ~ 80lb-ft)

2. Loosen the bolt & lock nuts.

Tightening torque:
100 ~ 120N.m (10.0 ~ 12.0kgf.m, 72 ~ 87lb-ft)

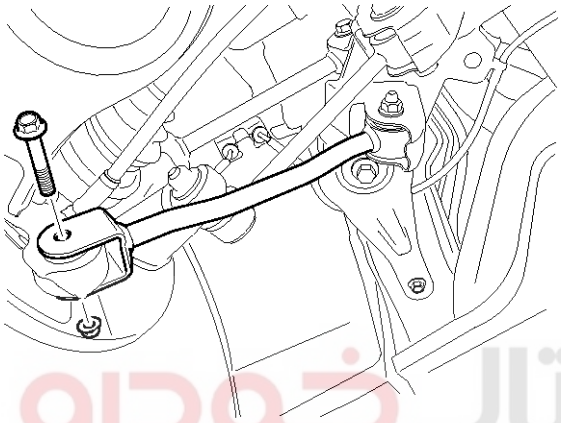

SBHSS8079D

3. Loosen the flange bolt & lock nuts.

Tightening torque:
100 ~ 120N.m (10.0 ~ 12.0kgf.m, 72 ~ 87lb-ft)

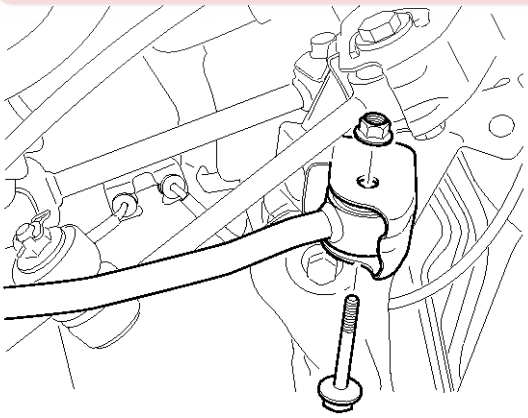

SBHSS8080D

4. Installation is the reverse of removal.

Inspection

1. Check the bushing for wear and deterioration.
2. Check the trailing arm deformation.
3. Check the all bolts.

Rear Lower Arm

Replacement

1. Remove the rear wheel & tire.

Tightening torque:
90 ~ 110N.m (9.0 ~ 11.0kgf.m, 65 ~ 80lb-ft)

2. Disconnect the rear height sensor & stabilizer link with the lower arm.

Tightening torque
Height sensor : 4 ~ 6N.m (0.4 ~ 0.6kgf.m, 3 ~ 4lb-ft)
Stabilizer link : 50 ~ 65N.m (5.0 ~ 6.5kgf.m, 36 ~ 47lb-ft)

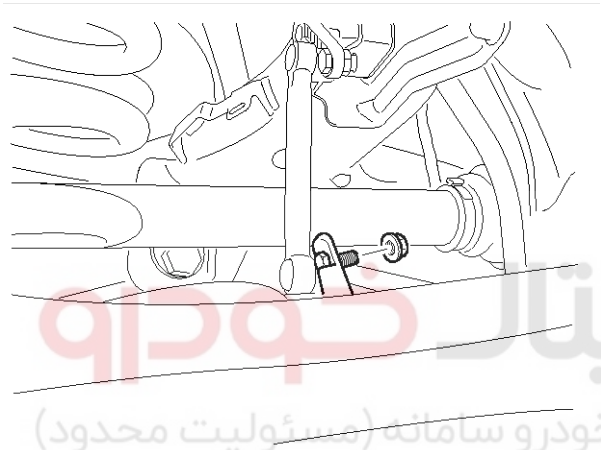

SBHSS8081D

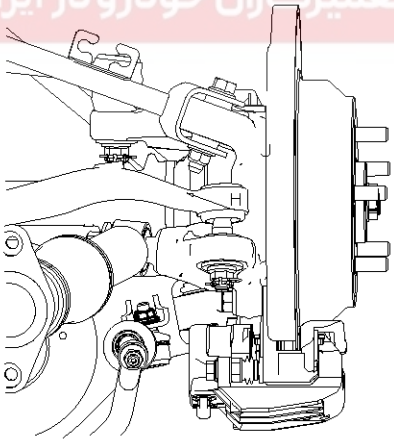

SBHSS8377D

3. Loosen the bolt (A), nuts (B), flange bolt (C), lock nuts (D).

Tightening torque
Axle : 140 ~ 160N.m (14.0 ~ 16.0kgf.m, 101 ~ 116lb-ft)
Damper : 100 ~ 120N.m (10.0 ~ 12.0kgf.m, 72 ~ 87lb-ft)

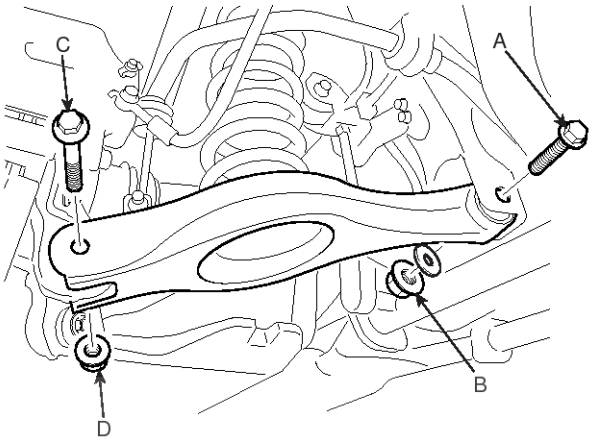

SBHSS8083D

4. Installation is the reverse of removal.

Inspection

1. Check the bushing for wear and deterioration.
2. Check the rear lower arm deformation.
3. Check the all bolts.
4. Check the coil spring pad for deterioration and deformation.

Rear Stabilizer Bar

Replacement

1. Remove the rear wheel & tire.

Tightening torque:
90 ~ 110N.m (9.0 ~ 11.0kgf.m, 65 ~ 80lb-ft)

2. Loosen the nuts (A).

Tightening torque:
50 ~ 65N.m (5.0 ~ 6.5kgf.m, 36 ~ 47lb-ft)

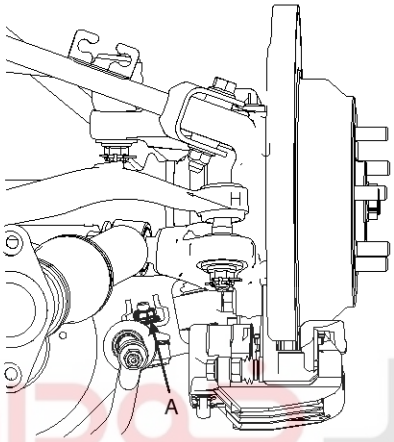

SBHSS8386D

3. Loosen the bolts (A).

Tightening torque:
45 ~ 55N.m (4.5 ~ 5.5kgf.m, 33 ~ 40lb-ft)

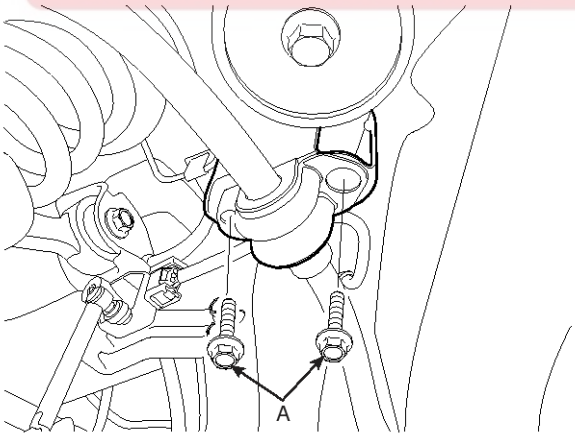

SBHSS8084D

4. Disconnect the rear stabilizer link with the stabilizer bar.

Tightening torque:
50 ~ 65N.m (5.0 ~ 6.5kgf.m, 36 ~ 47lb-ft)

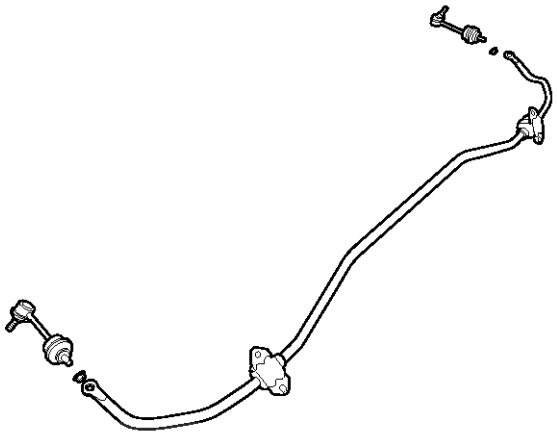

SBHSS8061D

5. Installation is the reverse of removal.

Inspection

1. Check the bushing for wear deterioration.
2. Check the all bolts.
3. Check the stabilizer bar for deformation.
4. Check the stabilizer link ball joint for damage.

Front Air Suspension System

General Information

Specification

Front air strut

Items	Specification
Air spring volume at design position	1.78ℓ
Maximum outher bellow diameter	118 mm
Burst pressure	31.5 bar
Minimum operating temperature	-40℃
Maximum operating temperature	80℃

Compressor

Items	Specification
Operation voltage	9 ~ 15 VDC
Max. perm. Current	35 A Min
Lower operation temperature	-40℃
Upper operation temperature	70℃
Storage Temperature	-40℃ ~ 90℃

Solenoid Valve

Items	Specification
Operation voltage	9 ~ 15 VDC
Lower operation temperature	-40℃
Upper operation temperature	70℃
Storage Temperature	-40℃ ~ 90℃

Height Sensor

Items	Specification
Required supply voltage	5 VDC 5%
Operation voltage	5 VDC 10%
Maximum allowed voltage range	20 V
Storage Temperature	-40℃ ~ 90℃

SS-26 Suspension System

Reservoir Tank

Items	Specification
Operating pressure	16.5 bar
Burst pressure	40 bar min
Air tank volume	5.2 ℓ

ECU

Items	Specification
Rated Voltage	12 V DC
Operating Voltage	10 ~ 16 V DC
Operation Temperature	-40℃ ~ 75℃
Storage Temperature	-40℃ ~ 90℃

Tightening Torques

Item	Tightening torque (kgf.m)		
	N.m	Kgf.m	lb-ft
Reservoir tank to crash box	17 ~ 26	1.7 ~ 2.6	12 ~ 19
Reservoir tank to frame housing	20 ~ 30	2 ~ 3	14 ~ 22
Front height sensor to frame	17 ~ 26	1.7 ~ 2.6	12 ~ 19
Front height sensor to lateral arm	17 ~ 26	1.7 ~ 2.6	12 ~ 19
Solenoid valve to bracket	4 ~ 25	0.4 ~ 2.5	3 ~ 18
Compressor to bracket	8 ~ 12	0.8 ~ 1.2	6 ~ 9
G-sensor to frame	4 ~ 6	0.4 ~ 0.6	3 ~ 4
Compressor & bracket to frame crash box	35 ~ 55	3.5 ~ 5.5	25 ~ 40
Air filter to frame	4 ~ 6	0.4 ~ 0.6	3 ~ 4
Front height sensor to frame	4 ~ 6	0.4 ~ 0.6	3 ~ 4
Feeling valve mounting bracket to frame	17 ~ 26	1.7 ~ 2.6	12 ~ 19
Front CDC connector mounting bracket	4 ~ 6	0.4 ~ 0.6	3 ~ 4
Front CDC wiring to frame	4 ~ 6	0.4 ~ 0.6	3 ~ 4

Description

Active type ECS is applied and it includes the self leveling function.

As shown in the picture, it consists of air spring, damper, reservoir tank, compressor (with dryer), solenoid valve block (pressure sensor embedded) and some other sensors.

The vehicle height is controlled electronically by air pressure generated from the compressor and the damping force of shock absorber also is controlled independently by solenoid valve.

The air spring is another type of spring that is becoming more popular on passenger cars, light trucks, and heavy trucks. The air spring is a rubber cylinder, filled with compressed air.

If the vehicles level is required to change, a valve opens to add, or release air from the air spring. An onboard compressor supplies air. Be sure that these air springs does not function as a device to control damping force during driving (shock absorbing effect only) but mainly controls the vehicle height. And it offers the particularly constant level regardless of the vehicle weight.

Leveling Control

High Level:

In order to minimize the interference between the vehicle body and the road surface, the vehicle level is controlled by following two features.

Manual – As long as the vehicle speed is lower than 70kph, possible to lift from normal to high level.

Opposite manual operation (from high to normal) has no restriction for the vehicle speed.

Automatic – If the vehicle speed exceeds 70kph with high level, it will be alternated into normal level automatically after 10sec for the safety.

Normal Level:

This is the basic level for normal driving condition. As same as high level, there are two features.

Manual – Refer to the above 'High level'.

Automatic – If the vehicle speed exceeds 120kph with normal level, it will be alternated into low level after 10sec for the safety and better fuel consumption.

Low Level:

No manual operation is supported.

Automatic – If the vehicle speed is lower than 80kph for more than 5sec, it will be alternated into normal mode automatically, however if it is lower than 40kph, it will be normal level immediately regardless of the time.

Whenever the level is changed, there is a time delay between front and rear wheel for the safety.

For lift, rear side will be advanced and front side will be lifted later on. For lowering, it is opposite.

(Because of this operating sequence, there may be a noise if the brake (AVH, EPB) is being engaged while level control).

Operation

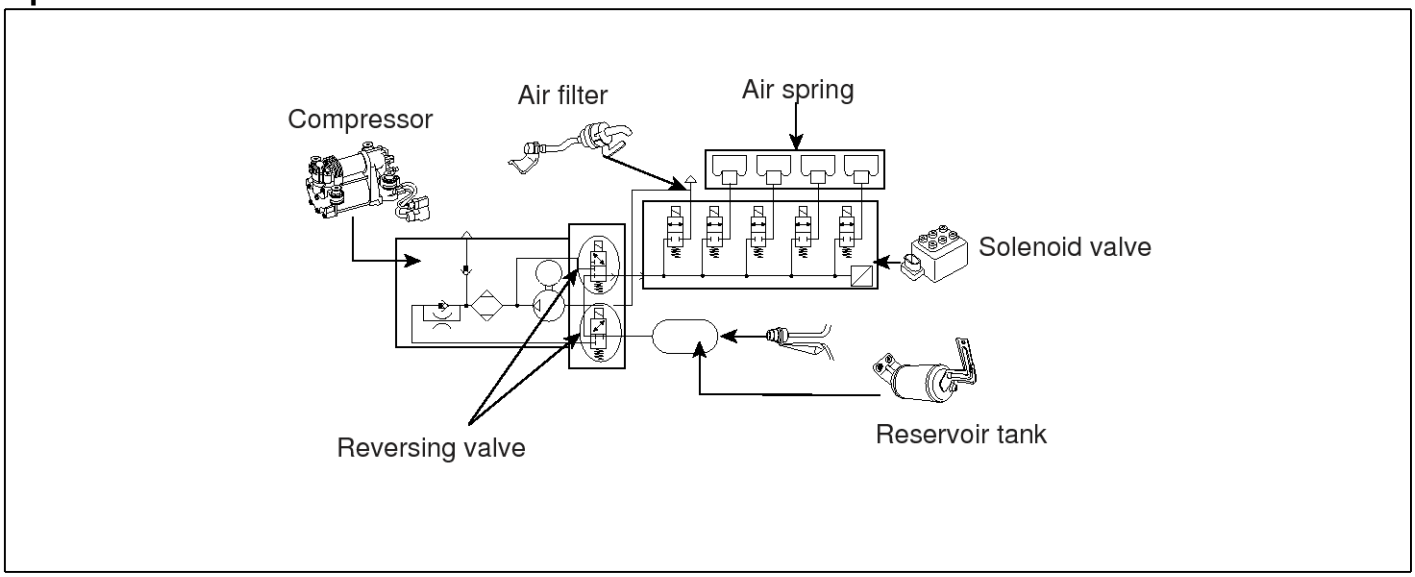

SBHSS9302L

As it is explained in the section of system layout, the close loop has some merit comparing the existing open loop type applied in Centennial.

In case of open loop type, system intakes the air from atmosphere and compresses it whenever necessary, therefore the system response time (leveling control time) is long. Even Lexus takes several minutes for controlling the vehicle level.

However in case of close loop type, the high pressure is stored in the reservoir tank in ordinary time and used whenever necessary, therefore the response time reduces dramatically. Of course even close loop system also does intake and exhaust for the supplementary filling of air, dryer regeneration accordingly but the actual air amount is very low.

System Air Filling

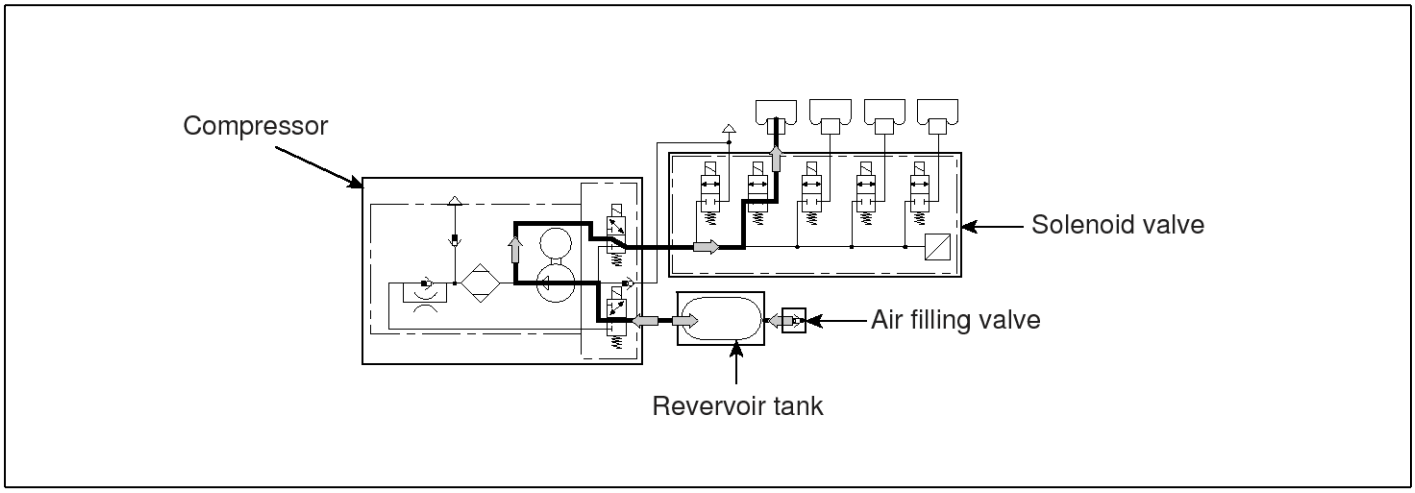

SBHSS9303L

This job should be done whenever the system components were replaced with new one (except the electrical sensor or control module). Using air filling machine, supply the air to the air filling valve offered in the LH side of engine room. Air will flow to reservoir tank, compressor and will arrive in the air springs.

- Due to the length of air tube and location, at first the front air spring is fulfilled and the rear air spring will be completed later on.
- The vehicle has to be lifted up. (The air spring (rubber) may be bent if the air spring was empty when the system filling starts)
- - IG ON and the particular mode in the scanner are required but engine starting is not necessary

  (Refer to the section of 'System air filling procedure' for more detail information)
- While the system air filling, the compressor (built in vehicle) does not operate.
- There are two kinds of air filling;

  System air filling: the external air pressure is supplied at the factory or workshop (1 time) the vehicle compressor does not operate. It is not possible to do this filling by vehicle compressor. The overload of compressor must be avoided and furthermore, the vehicle compressor will not operate if the air pressure (volume) is too low. (Less than 80 ~ 120 bar-liter)Garage air filling (Supplementary filling): whenever the supplemental air is required in the system, the air is filled by the vehicle compressor.

Depending on the capacity and the pressure of the air filling machine, the whole time to complete differs but mostly it takes around 50 sec.

The target air pressure level at each component is;

- Front air spring: around 7.5bar, Rear air spring: around 8.5bar, Reservoir: around 9~10bar.

  However, it may change with a little amount in the case of air spring depending on the weight of vehicle (passenger & baggage)

Lifting Level

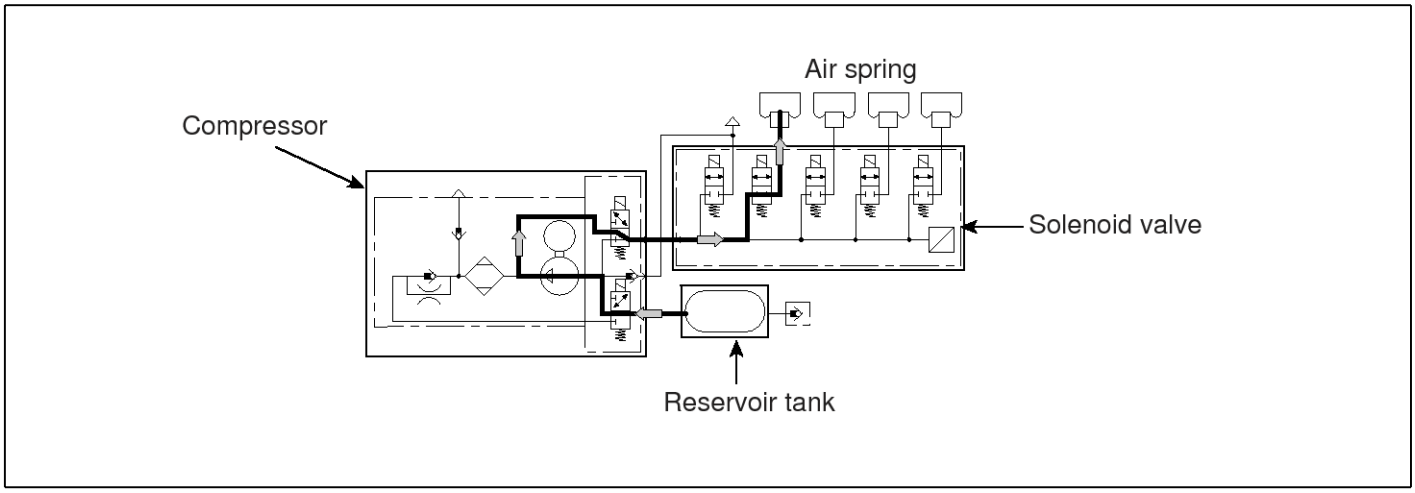

SBHSS9304L

By operating the compressor, the compressed air inside reservoir tank will be moved into the air spring via solenoid valve block in order to lift up the vehicle height. During lifting mode, the air does not pass the dryer as shown in the picture. The front rear springs are lifted at first and then front springs are followed when lift the vehicle. The reason is to reduce the air resistance while driving and avoid giving an excessive headlamp beam to the driver in opposite direction lane on the road for the safety.

Lowering Level

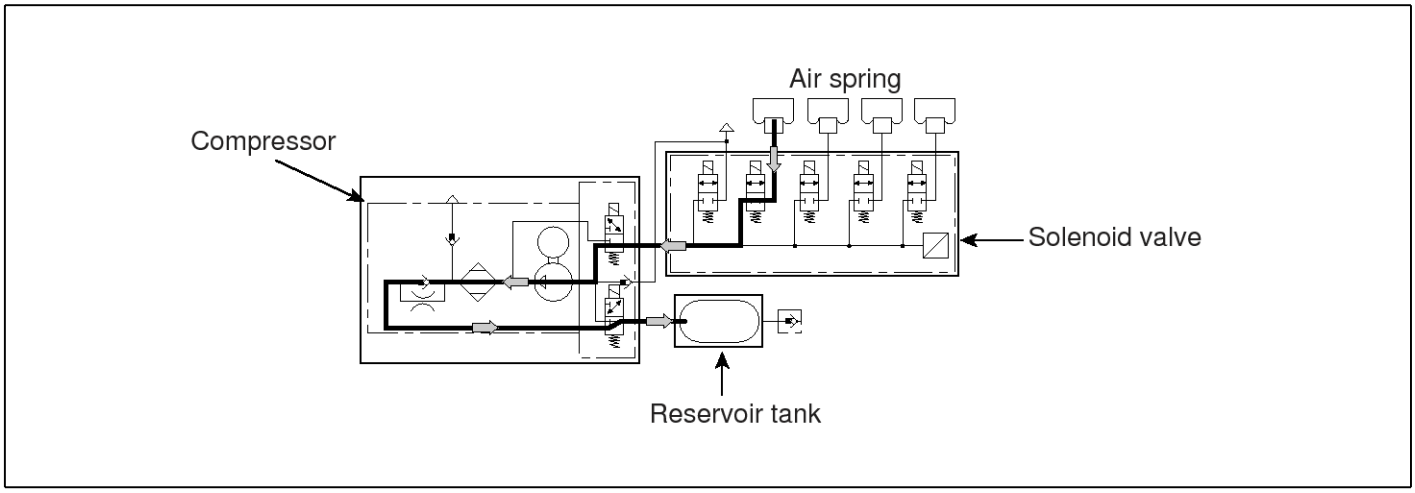

SBHSS9305L

Whenever lowering the vehicle, the dryness is accomplished by flow the air through dryer as shown in the picture. The reverse valve and air spring valves are open so that the compressed air comes out from the air spring. At the same time, the compressor is operated so that the air passes through the dryer in order to store dried air into the reservoir tank. Be sure that even during the process of lowering, the compressor will operate in normal condition (as long as the compressor and compressor relay is normal).

Of course, if the compressor or compressor relay is failed, the lowering (down-leveling) is available by operating the ambient valve (No. 7 in the picture) only like a process of 'air discharge' but this is done only in case of emergency condition.

For example, the vehicle is running with high level and the compressor (or relay) failure is detected, if the vehicle speed is higher than 70kph for 10sec or more, the vehicle height should be lowered to normal level by ambient valve for the safety and lower fuel consumption.

Air Filling (Supplementary)

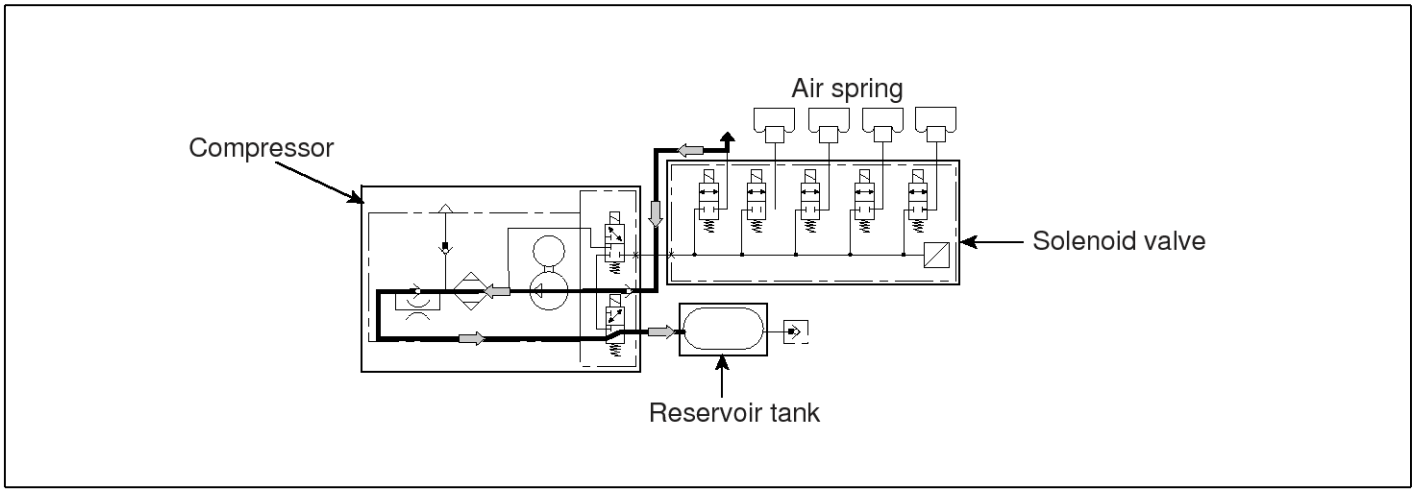

SBHSS9306L

If the air mass inside the system is less than 93 bar-liter (refer to the concept of 'bar-liter' in the page of 'current data' in this manual), the air is added by the compressor in the vehicle. At this time the air passes through the dryer as shown in the picture so that the dry air can be supplied into the system. Mostly this may happen in case of long time parking.

Air Discharge (Dryness)

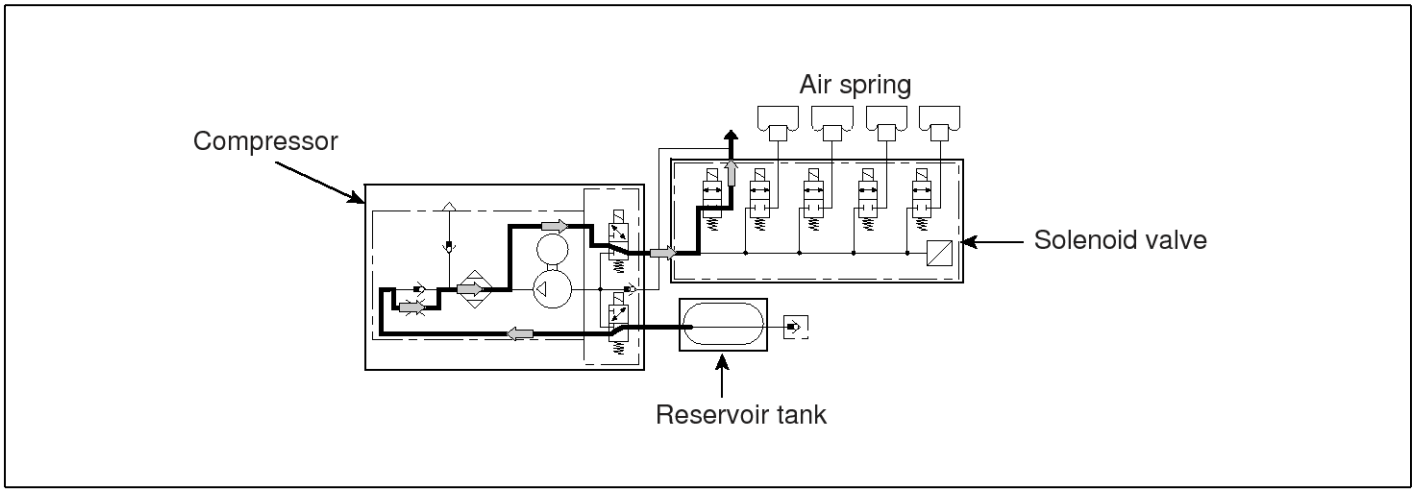

SBHSS9307L

The purpose of doing air discharge is only to regenerate the air dryer built in the compressor. The discharged air amount is very small.

The independent logic to perform air discharge is implemented to decide the regeneration period based on the following factors. (Not performed every ignition cycle)

- Air pressure sensor (built in the compressor) signal
- Height sensor signal
- Engine room temperature

Not only for dryer regeneration but also for other reason, sometimes it is necessary to discharge the air from the system. Scanner offers the 'Air discharge mode' to cope with this time, and just enter to the above mode and perform the air discharge. Sometimes, air discharging is required to inspect the noise from the rear chassis frame or front suspension. Scanner will control the reverse valve and five solenoid valves in the solenoid block in order to discharge the air electrically.

Be sure that this menu in the scanner does not offer the discharge of air in the reservoir tank as follows.

1. From air filter to solenoid valve block (mostly air in the air springs):

   The air in this area can be discharged by the scanner (electrically)

2. Air in the reservoir cannot be discharged by electrical driving of solenoid valve in the scanner.

Instead, you can disconnect the air tube between the compressor and reservoir tank manually.

Then only the air in the tank will be discharged as long as the air in the air springs is clogged by the solenoid valves.

This means that the vehicle will not be rapidly lowered even if the mentioned tube is disconnected. However, disconnect the tube gently because the air will come out rapidly.

Components Location

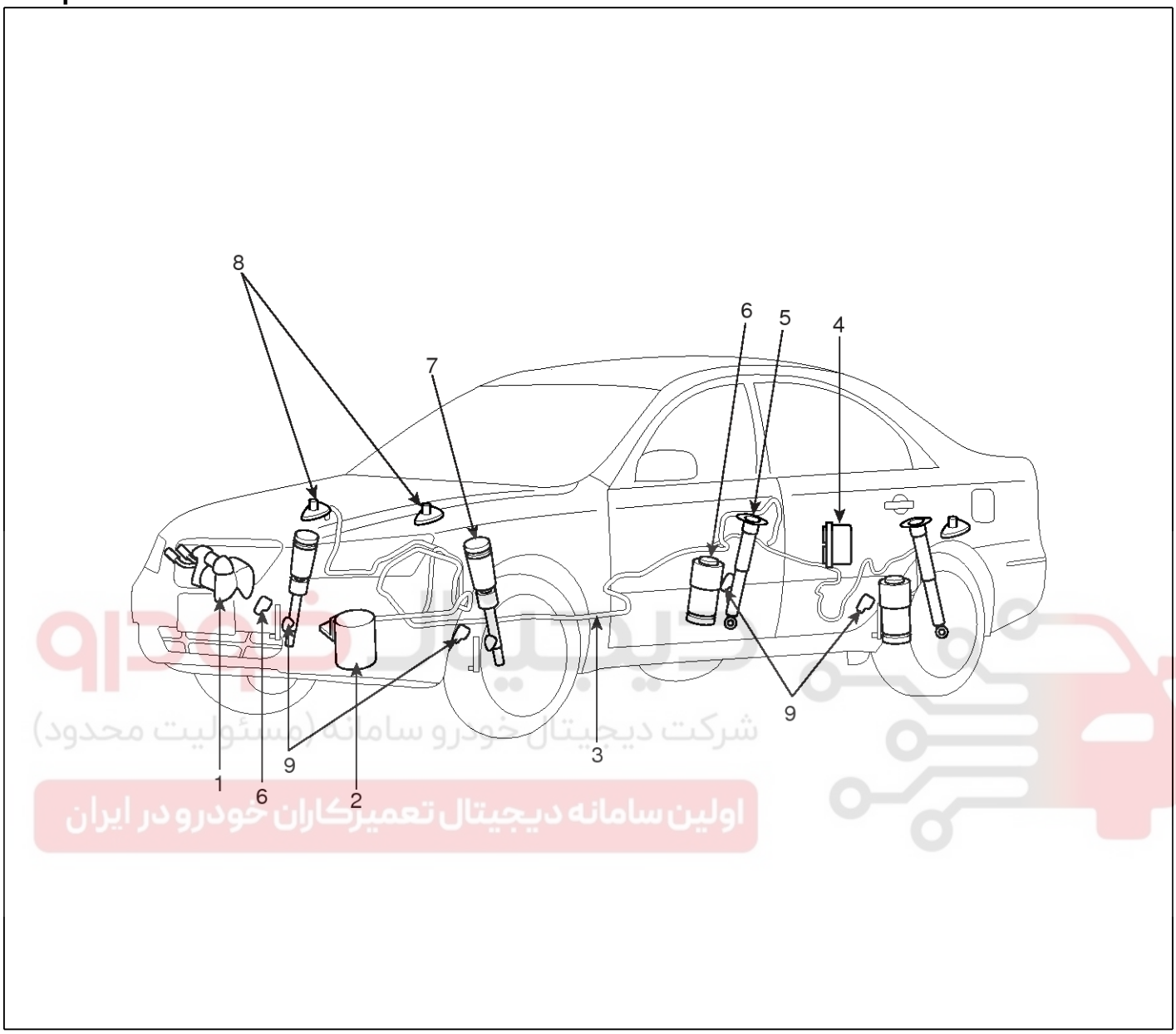

SBHSS8025D

1. Compressor & Solenoid valve
2. Reservoir Tank
3. Air Tube
4. ECU
5. CDC Damper
6. Rear Air Spring
7. Front Air Strut
8. G-Sensor
9. Height Sensor

Reservoir Tank

Description

The volume is 5.2 liter and the maximum operation pressure is 16bar. (Bursting pressure: 40bar)

The pressure of reservoir tank is monitored every 30 min while driving.

Components

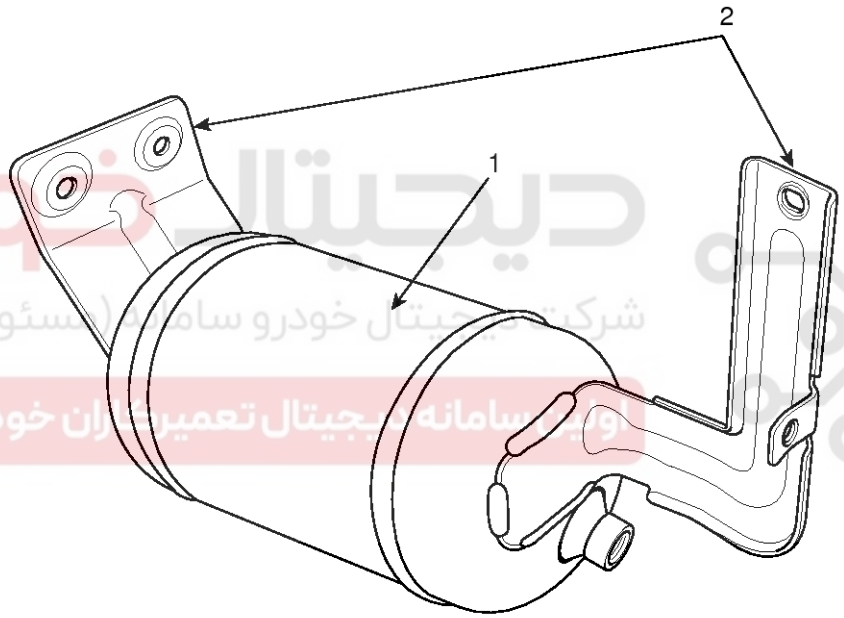

SBHSS8026D

1. Reservoir Tank
2. Bracket

Removal

⚠CAUTION

- **Do not remove cap except assemble and disassemble.**
- **Do not pile up the parts.**
- **Take care that is not deformed by outside impact.**
- **Do not use the clip again.**
- **Air tube marking take care not to be came off.**
- **Do not damage the tube.**

1. Remove the front bumper. (Refer to BD group)
2. Remove the left head light. (Refer to BE group)
3. Remove the bolt (A) & clip (B) & air hose (C).

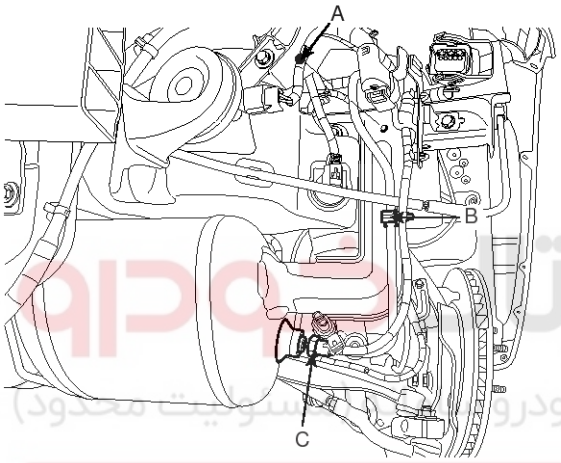

SBHSS8027D

4. Disconnect the reservoir tank by remove the bolt (A) & air tube (B).

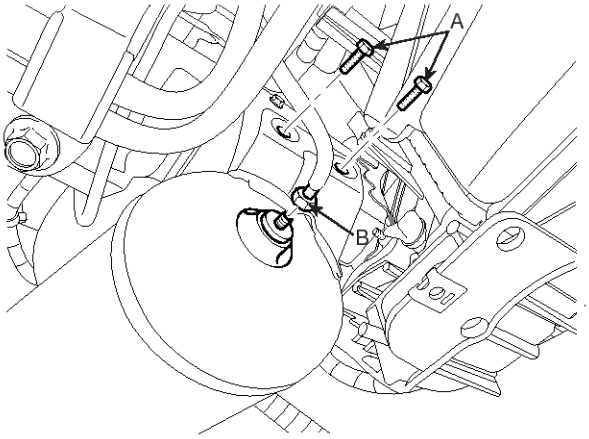

SBHSS8028D

⚠CAUTION

Separate completely after bleeding air slowly.

Installation

1. Install the Bolt (A) & air hose (B).

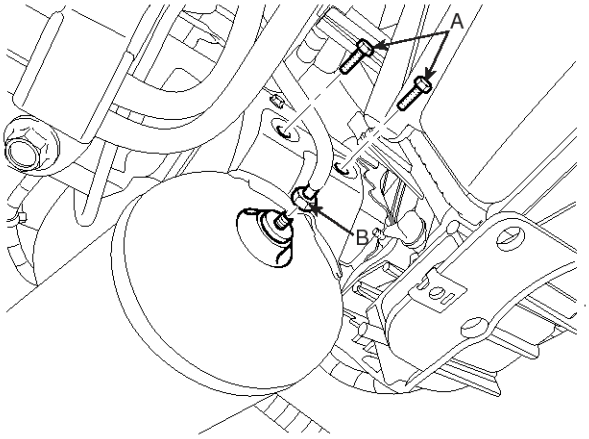

SBHSS8028D

2. Install the bolt (A) & clip (B) & air hose (C).

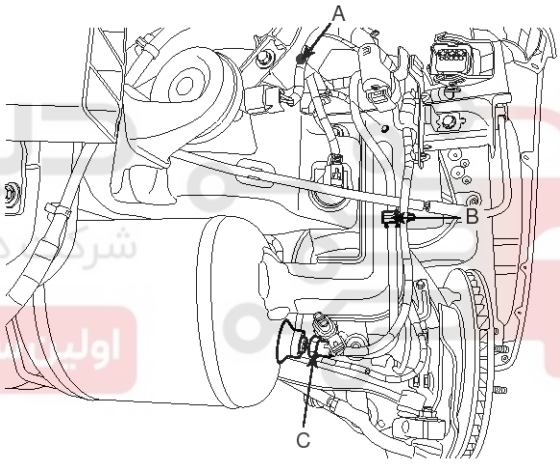

SBHSS8027D

⚠CAUTION

- **With vehicles sit down in the floor, do not inflate air.**
- **When air filling, always do it after lifting up the vehicle.**
- **Take care not to drop.**
- **Confirm the tube color in installation process.**
- **Confirm that whether the tube is escaped a not by puling it.**
- **Assemble with specific torque.**
- **Assemble with out dust cap removal.**
- **Remove cap and check escape by inserting hose.**

Air filling

System air filling machine

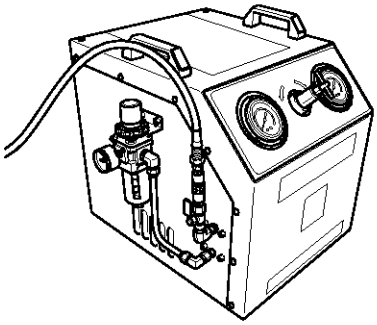

SBHSS8098D

System air filling is done at the factory before delivering the vehicle. In case of workshop, it should be done after replacing the related parts or the system air was drained because of other repairing works. Follow the recommended procedure for system air filling.

1. Prepare the compressed air (12bar) using the air filling machine.
2. Connect the air outlet nozzle in the machine to the air filling valve (RH side of engine room) in the vehicle.

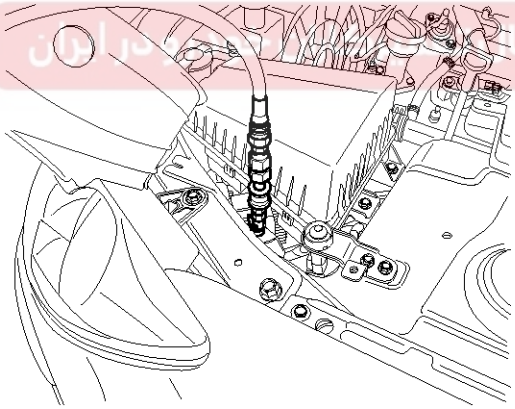

SBHSS8099D

3. Ignition ON (engine off) and connect the scanner.
4. Lift up the vehicle (all wheels must be rebounded)
5. Opening the lever in the machine, starts to fill the air from filling machine to the reservoir tank in the vehicle until the whistle sound stops.
6. Enter the menu of system air filling in the scanner and follow the instruction in the scanner.

   The compressed air will be transferred to the front air spring and rear air spring accordingly by operating the compressor and solenoid valves.
7. Take down the vehicle after completing the air filling.

⚠CAUTION

- **Do not face the person because the used air is high pressure.**
- **Be sure to check the installing states of each connecting portion before working.**
- **Replace filter of air filler and moisture remove 1 time every 2 years.**

Air Filling / Venting setup

1. Connect to the diagnostic.

Connector

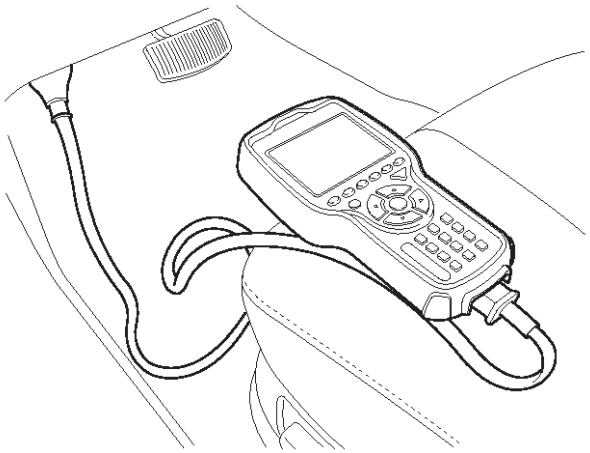

BHIE511D

```
1.6. AIR FILLING / VENTING SETUP

01. RESERVIOR AIR FILLING
02. SPRING/STLUTS AIR FILLING
03. SPRING/STLUTS AIR VENTING
```

SBHSS9314L

```
1.6. AIR FILLING / VENTING SETUP

01. RESERVIOR AIR FILLING
02. SPRING/STLUTS AIR FILLING
03. SPRING/STLUTS AIR VENTING

IF 'AIR FILLING COMPLETE'
MESSAGE IS NOT DISPLAYED UNTIL
2 MINUTES STOP THIS FUNCTION
WITH ESC BUTTON..
```

SBHSS9315L

```
1.9RESERVIOR AIR FILLING

01. FL STLUTS
02. FR STLUTS
03. RL SPRING
04. RR SPRING
```

SBHSS9316L

```
1.9SPRING/STLUTS AIR VENTING

01. FL STLUTS
02. FR STLUTS
03. RL STLUTS
04. RR STLUTS
05. FRONT STLUTS (FL+FR)
06. REAR STLUTS (RL+RR)
07. ALL
```

SBHSS9317L

Compressor

Description

The compressor operates in all events except the system air filling and two solenoid valves (referred to as reverse valve, on-off control, and normal open) are embedded.

Air dryer is maintenance free (permanent use).

The relief valve opens upon the pressure of 20±3bar.

The compressor relay is monitored by control module in order to detect any failure in relay. If the compressor relay is failed (short to battery, short to ground or open circuit), the lifting is prohibited but down leveling is only available. However, the down leveling is done not by compressor but ambient valve.

Components

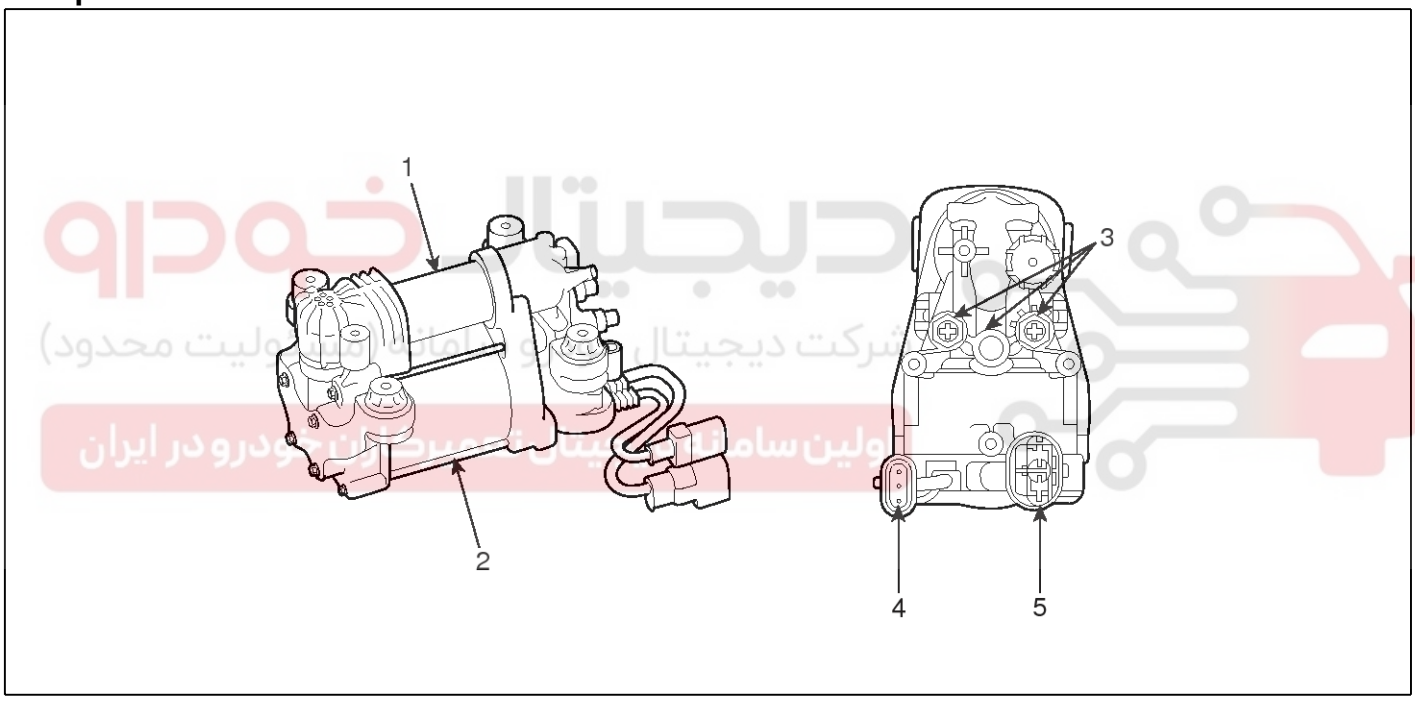

SBHSS8033D

1. Dyer
2. Motor
3. Connected to air tube
4. Reverse valve connector
5. Connector for motor driveing

Replacement

CAUTION

- **Avoid suffering excessive impact.**
- **Do not entering the water into pin inside.**
- **Do not remove cap except assemble and disassemble.**
- **Do not pile up the parts.**
- **If weight of product is heavy, the wire should be disconnected.**
- **Do not move with hold the wire.**

1. Remove the front bumper. (Refer to BD group)
2. Remove the left head light. (Refer to BE group)
3. Disconnect the connector.

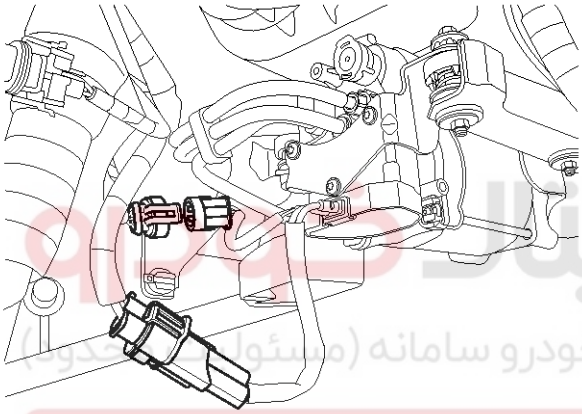

SBHSS8029D

4. Disconnect the air tube.

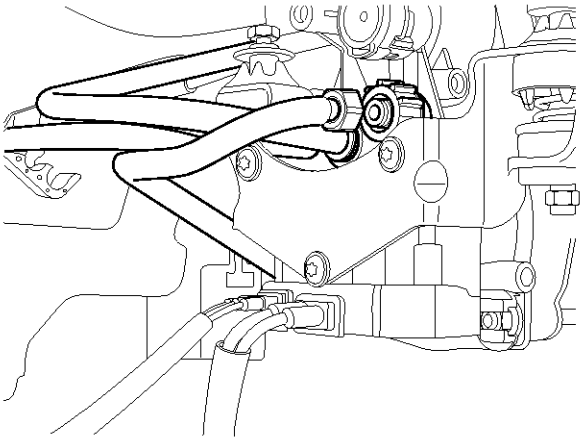

SBHSS8030D

NOTICE

- *Work with time until air is discharged.*
- *Separate with push the air tube connected to center portion.*

5. Loosen the bolt (A).

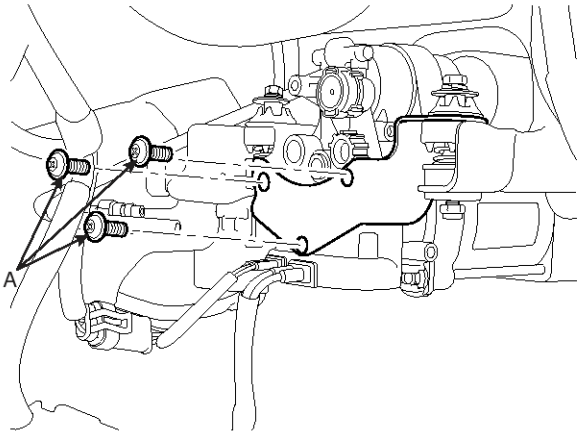

SBHSS8031D

6. Loosen the bolt (A) by then remove the compressor.

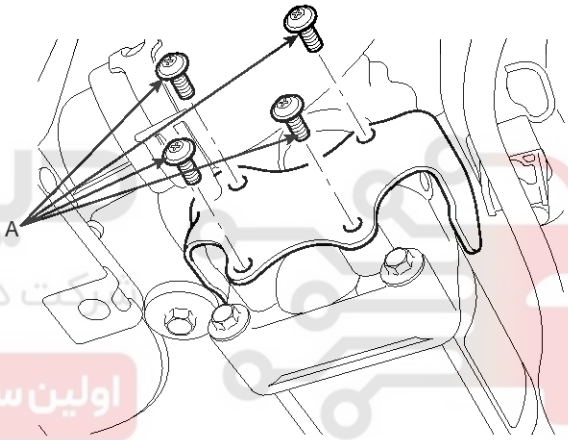

SBHSS8032D

7. Installation is the reverse of removal.

CAUTION

- **Take care not to drop.**
- **Confirm the tube color in installation process.**
- **Confirm that whether the tube is escaped a not by puling it.**
- **Be careful not to disconnection of cable by its twist or excessive bending.**
- **Do not remove cap except assemble.**
- **Take care not to twisted.**
- **If disaasemble the air tube connector, do not reuse it.**
- **Air tube marking takes care not to be came off.**

Solenoid Valve

Description

Four air spring solenoid valves ('-' control) and one ambient solenoid valve are embedded inside this solenoid valve block as shown in the circuit diagram below. When connecting the air tube to the solenoid valve block, carefully check the color dot which is marked on the valve and tube so that all colors should be matched each other.

The pressure sensor is built in the solenoid valve block so that it detects the internal pressure when lifting or lowering the vehicle height. Also it senses the pressure of reservoir tank every 30 minutes when the vehicle is running.

Components

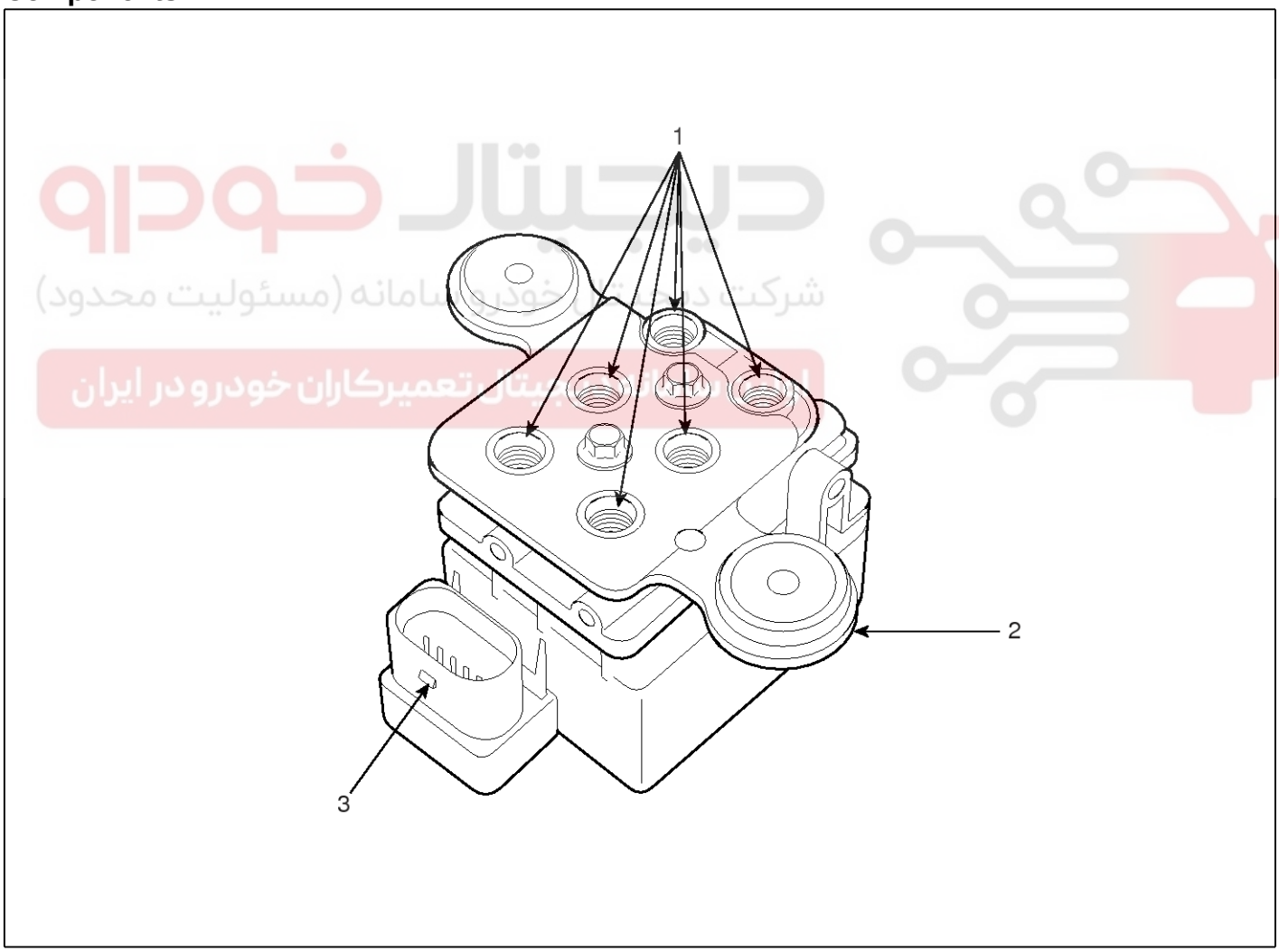

SBHSS8034D

1. Connected to air tube
2. Bracket
3. Connector

Replacement

CAUTION

- **Avoid suffering excessive impact.**
- **Do not entering the water into pin inside.**
- **Do not remove cap except assemble and disassemble.**
- **Do not pile up the parts.**
- **Air tube marking takes care not to be came off.**
- **Take care not to twisted.**

1. Remove the front bumper. (Refer to BD group)
2. Remove the left head light. (Refer to BE group)
3. Disconnect the connector.

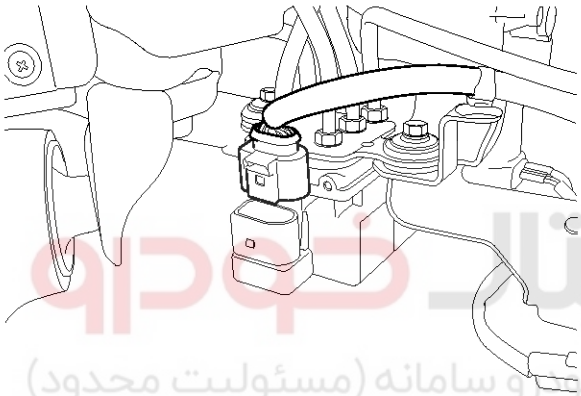

SBHSS8035D

NOTICE

Remove the air fally with enough interval of time and separate completely.

4. Disconnect the air tube.

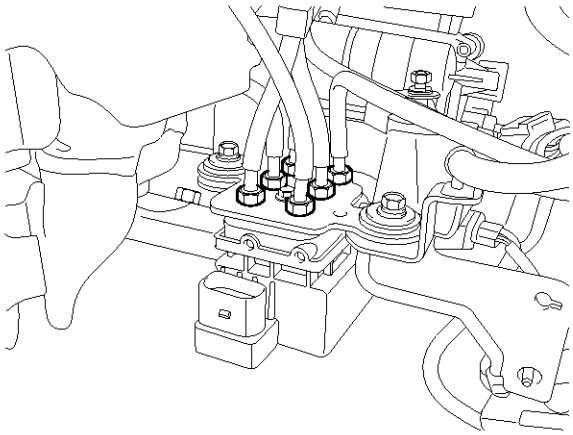

SBHSS8036D

5. Loosen the bolt by then remove the compressor.

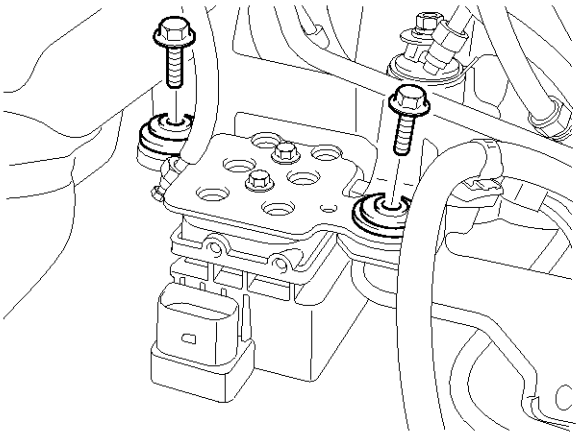

SBHSS8037D

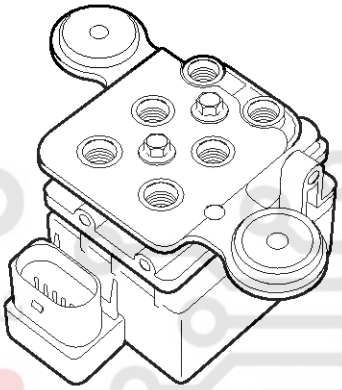

SBHSS8309D

6. Installation is the reverse of removal.

Height Sensor

Description

Applying Hall IC, it detects the level and the bouncing acceleration of vehicle. It is installed at all suspension (4EA). Even if the sensor bracket is different, 4 sensors in each corner can be interchangeable. Receiving these values, control module controls not only vehicle level but also damping force for the CDC damper. This signal is the main for vehicle level control.

Components

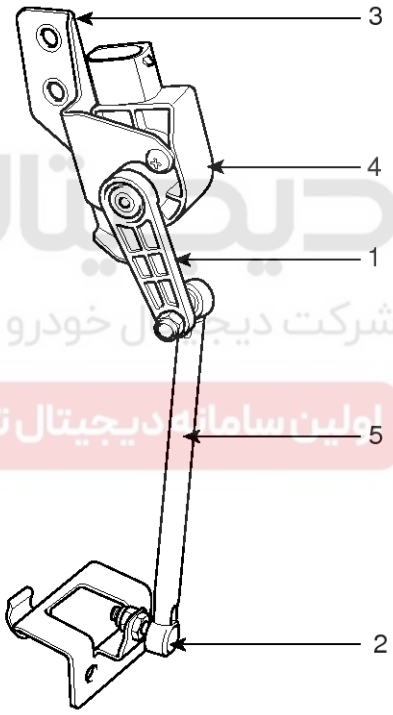

SBHSS8038D

1. Lever
2. Bracket
3. Bracket
4. Height sensor
5. Rod

Replacement

CAUTION

- **Avoid suffering excessive impact.**
- **Do not entering the water into pin inside.**
- **Take care not to be damaged height sensor witch is beakable.**

1. Remove the front wheel & tire.
2. Disconnect the connector.

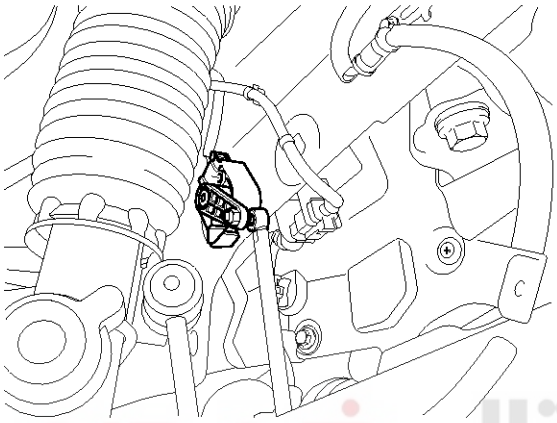

SBHSS8039D

3. Loosen the bolt (A).

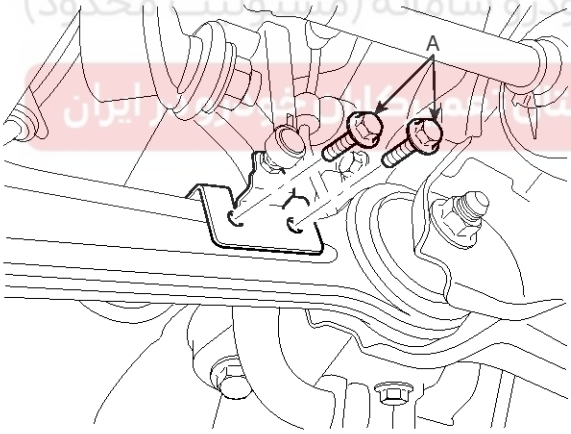

SBHSS8040D

4. Loosen the bolt (A) by then remove the height sensor.

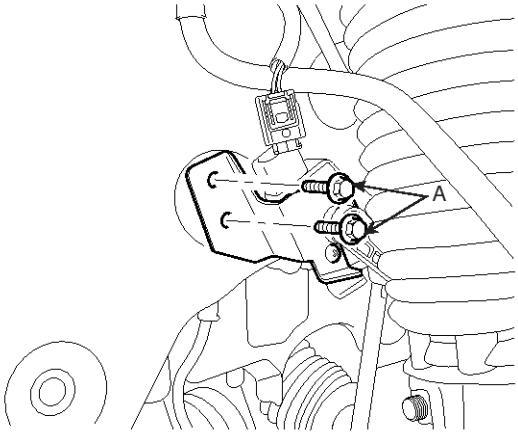

SBHSS8041D

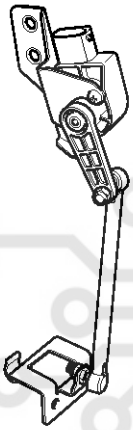

SBHSS8310D

5. Installation is the reverse of removal.

Height sensor calibration

1. Connect to the diagnostic connector.

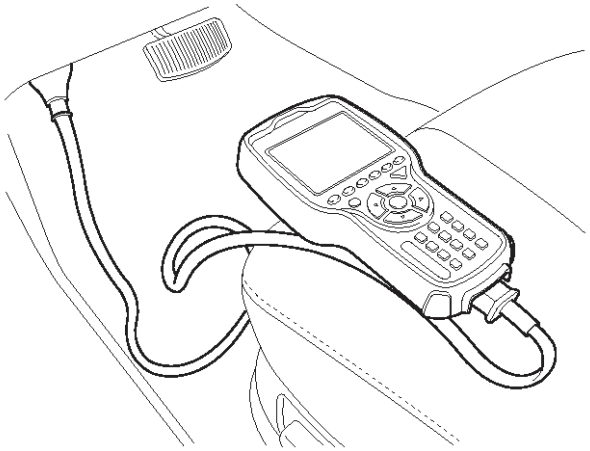

BHIE511D

HEIGHT SENSOR CALIBRATION
AIM : TO INITIALIZE HEIGHT SENSOR CALIBRATION. AFTER REPLACING THE ECU OR THE HEIGHT SENSOR YOU MUST DO HEIGHT SENSOR CALIBRATION. WITHOUT DOING THIS FUNCTION, A FAILURE MESSAGE IS DISPLAYED
C1620 : HEIGHT SENSOR CALIBRATED NOT COMPLETED
STATUS : IG. ON, ENGINE STOPPED, DO THIS FUNCTION AFTER PARKING ON THE LEVEL GROUND

SBHSS9318L

Air Strut Assembly

Description

The air spring & damper is one unit so that it is not possible to make separation.

The average pressure of front air spring is around 7.5 bar.When the front air spring is delivered as service spare part, the air is filled with the pressure of 3 bar.

- Air spring

  Controls the vehicle height in real time
- CDC damper

  Controls damping force depending on the road condition

While CDC damping control, 4 Corner will be controlled by same damping force (hard, soft). The system controls all required factors which is necessary for all driving conditions such as pitch, roll, ride and sky hook. The solenoid only cannot be replaced, that is the air damper assembly should be replaced if the solenoid valve is failed. The damping force will be the maximum (hard damper), if the current of solenoid valve is not supplied.

Components

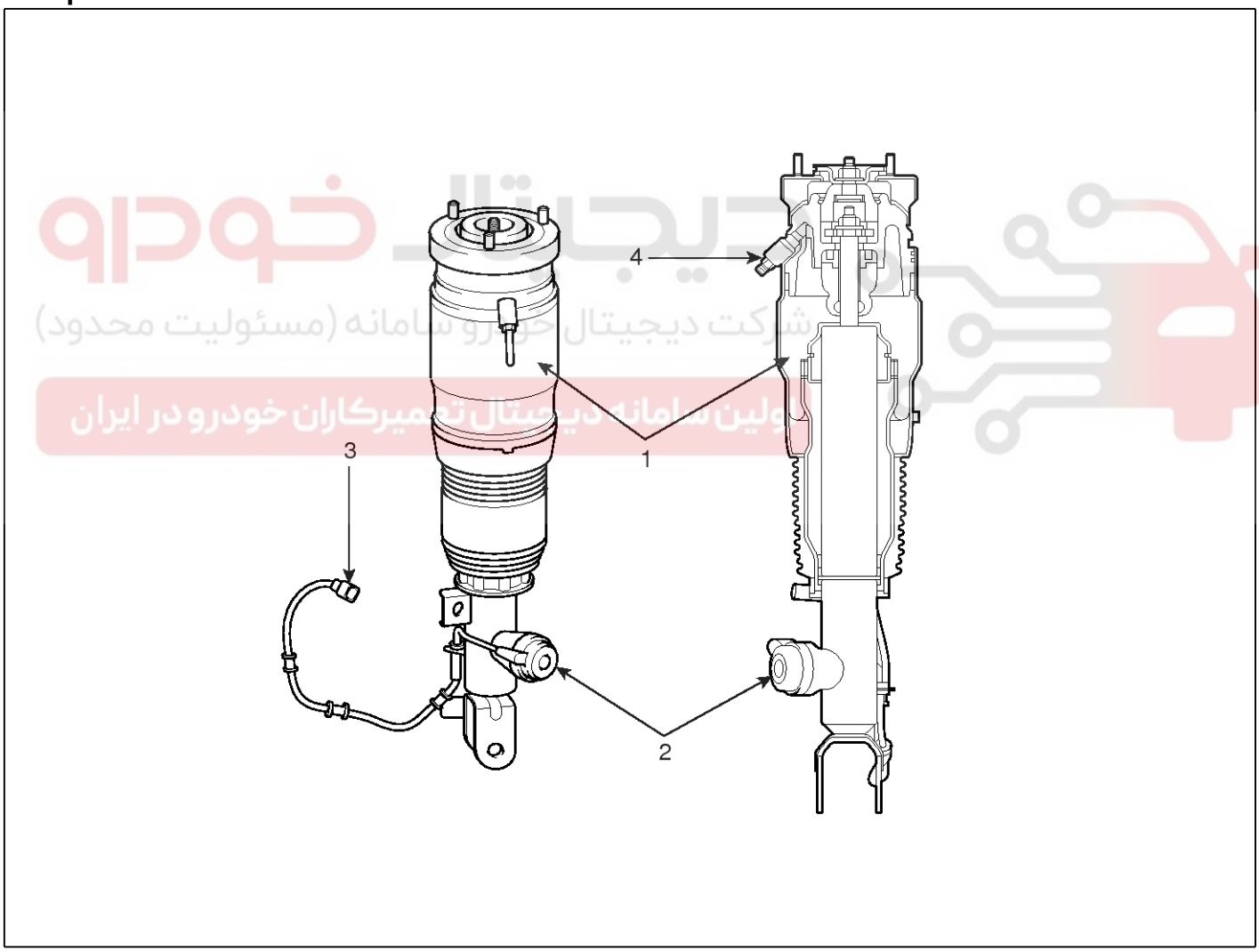

SBHSS8042D

1. Air Spring
2. CDC Damper
3. Connector
4. Connected to air tube

Replacement

CAUTION

- **Avoid suffering excessive impact.**
- **Do not entering the water into pin wire.**
- **Do not move with hold the wire.**
- **Be sure to remove air connector previously, perform other works.**
- **Take care because the connector of damper is fragile.**
- **Do not hold gaiter or cable while loading or transportation.**

1. Remove the front wheel & tire.

Tightening torque:
90 ~ 110N.m (9.0 ~ 11.0kgf.m, 65 ~ 80lb-ft)

2. Disconnect the connector (A).

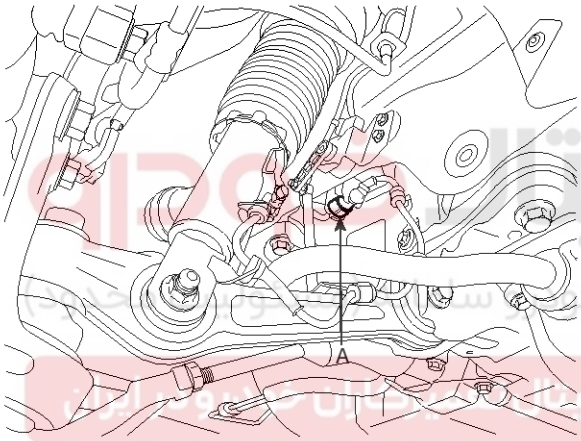

SBHSS8043D

3. Disconnect the stabilizer link with the front strut assembly by loosening the nuts (A).

Tightening torque:
100 ~ 120N.m (10.0 ~ 12.0kgf.m, 72 ~ 87lb-ft)

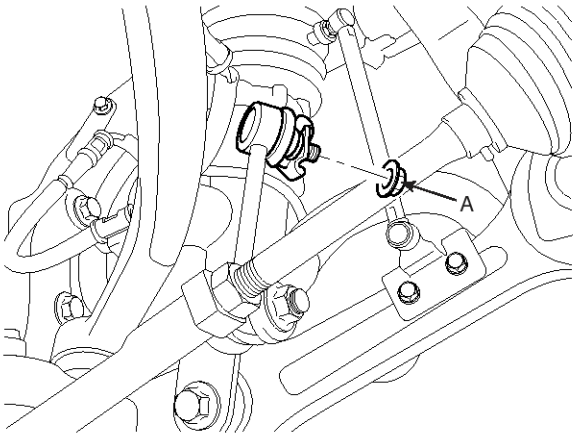

SBHSS8044D

4. Disconnect the front strut assembly (C) with the front lower arm by loosening the bolt & nuts (B).

Tightening torque:
140 ~ 160N.m (14.0 ~ 16.0kgf.m, 101 ~ 116lb-ft)

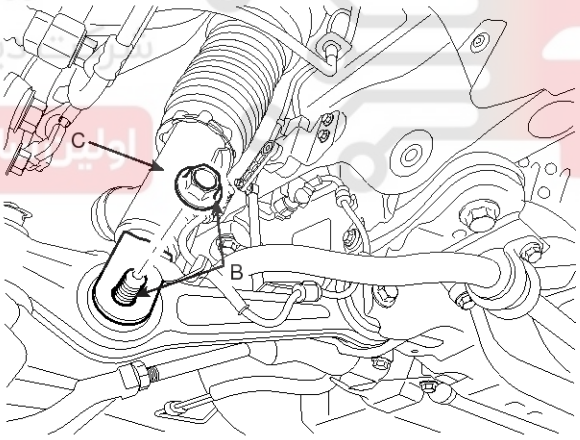

SBHSS8045D

5. Remove the split pin and castle nuts.

Tightening torque:
80 ~ 90N.m (8.0 ~ 9.0kgf.m, 58 ~ 65lb-ft)

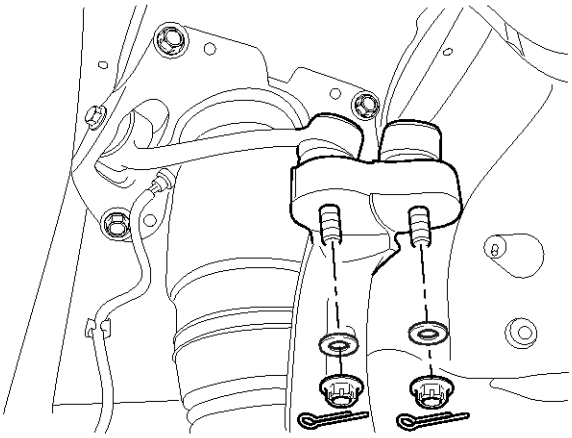

SBHSS8046D

6. Disconnect the front upper arm with the knuckle using a SST (09568-2J100).

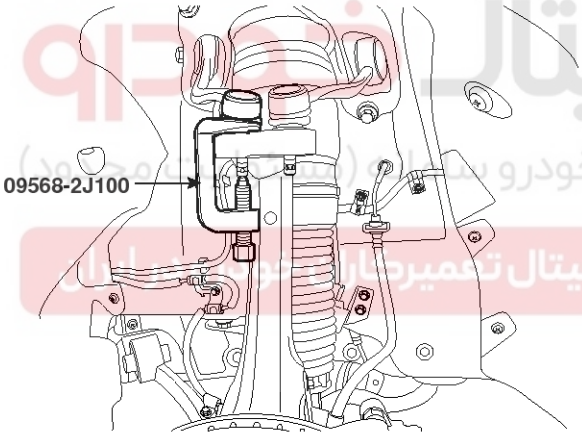

SBHSS8047D

7. Disconnect the front strut assembly with the frame by loosening the mounting bolt (A).

Tightening torque:
55 ~ 65N.m (5.5 ~ 6.5kgf.m, 40 ~ 47lb-ft)

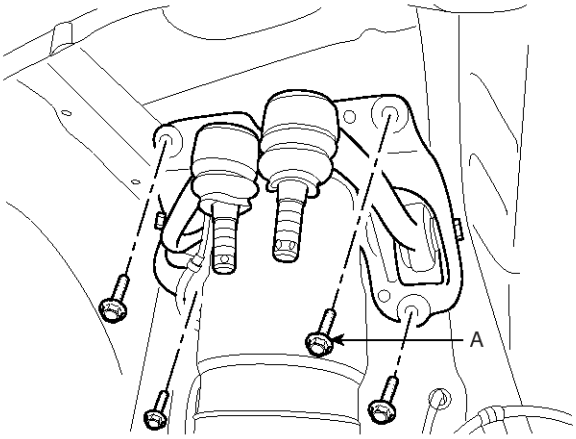

SBHSS8048D

8. Disconnect the bracket (B) with the front strut assembly (A) loosening the nuts.

Tightening torque:
20 ~ 30N.m (2.0 ~ 3.0kgf.m, 14 ~ 22lb-ft)

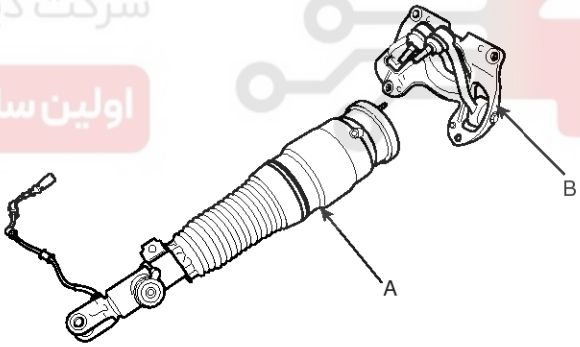

SBHSS8091D

9. Installation is the reverse of removal.

⚠CAUTION

- **Take care not toe twist upper and lower.**
- **After transportaion, check the cleanliness.**
- **Check the cap which prevents entering foreigh materials on the connecotr of air filling protion.**
- **Kepp in mind in upper arm installing angle.**

G Sensor

Description

Because this sensor signal is a main input for the CDC damping control, it is referred to as CDC sensor. The sensor power supply is 5V and output from 0.5 to 4.5V under normal driving condition.

In case of vehicle stationary, it outputs 2.5V.

Totally 3 sensors are installed, one for rear left side (inside of trunk, nearby ECS control module) and other two sensors are for front side (left and right accordingly).

There is no other particular reason except for lower cost to have only one sensor in case of rear side. However, in case of front side, much more changes occur comparing with the rear side so that two independent sensors are required. Three sensors have same part number so that it is interchangeable each other.

- It detects the bouncing acceleration of vehicle and installed at the front area (2EA) and rear area (1EA).
- Receiving G-sensor output value, control module controls the solenoid valve in the CDC damper.

Components Location

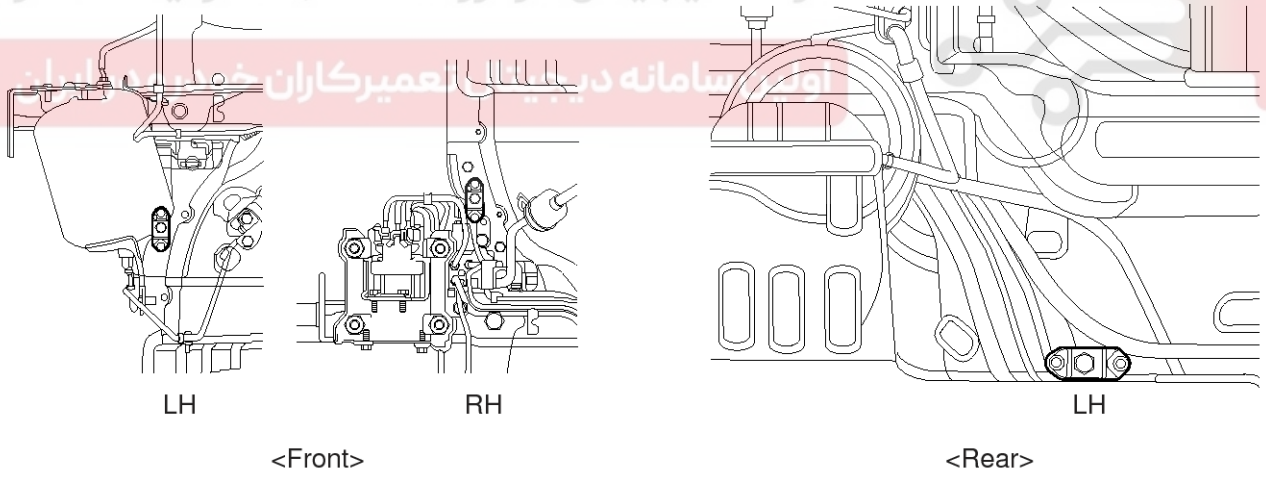

Tightening torque : 0.4 ~ 0.6kgf.m

SBHSS9308L

Front Upper Arm

Replacement

1. Remove the front wheel & tire.

Tightening torque:
90 ~ 110N.m (9.0 ~ 11.0kgf.m, 65 ~ 80lb-ft)

2. Remove the front assembly.
   (Refer to front strut assembly.)
3. Disconnect the front upper arm (A) with the front strut assembly bracket (B) by loosening the bolt.

Tightening torque:
100 ~ 120 N.m (10.0 ~ 12.0kgf.m, 72 ~ 87lb-ft)

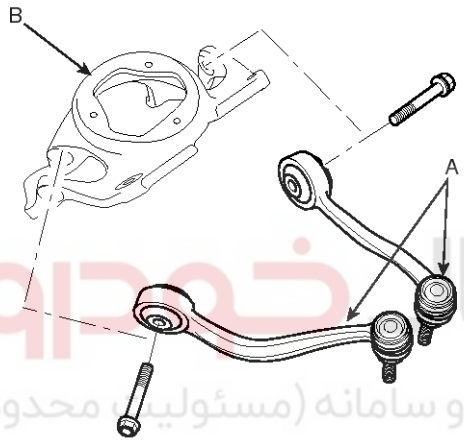

SBHSS8006D

4. Installation is the reverse of removal.

CAUTION
Keep in mind in upper arm installing angle.

Inspection

1. Check the bushing for wear and deterioration.
2. Check the ball joint for rotating torque.

Front Lower Arm

Replacement

Replacement the lateral arm.

1. Remove the front wheel & tire.

Tightening torque:
90 ~ 110N.m (9.0 ~ 11.0kgf.m, 65 ~ 80lb-ft)

2. Loosen the bolts (A) & nuts (B).

Tightening torque:
7 ~ 13N.m (0.7 ~ 1.3kgf.m, 5 ~ 9lb-ft)

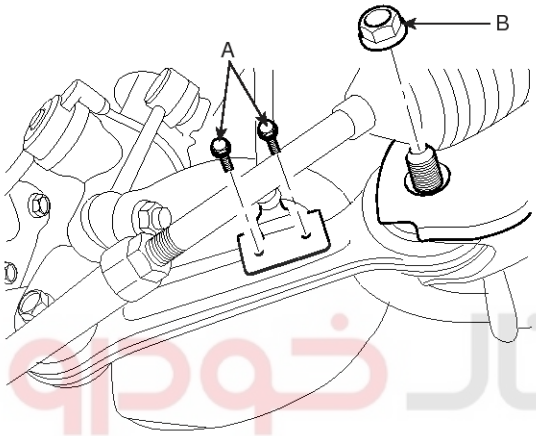

SBHSS8007D

3. Disconnect the lateral arm (C) with the front strut assembly (D) by loosening the flange bolts (A) & lock nuts (B).

Tightening torque:
140 ~ 160N.m (14.0 ~ 16.0kgf.m, 101 ~ 116lb-ft)

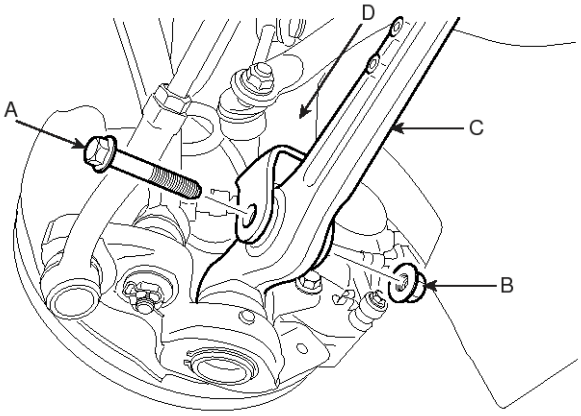

SBHSS8067D

4. Remove the split pin and castle nuts.

Tightening torque:
140 ~ 160N.m (14.0 ~ 16.0kgf.m, 101 ~ 116lb-ft)

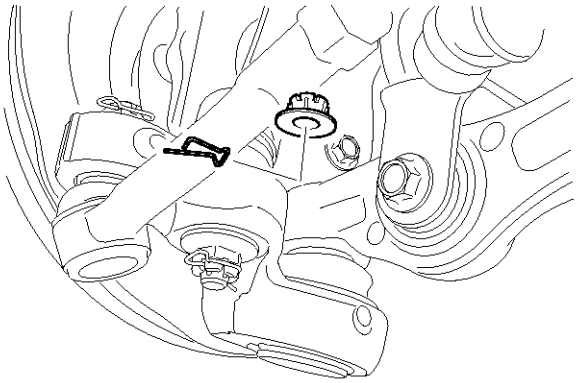

SBHSS8068D

5. Disconnect the lateral arm (A) with the front knuckle using a SST (09568-2J100).

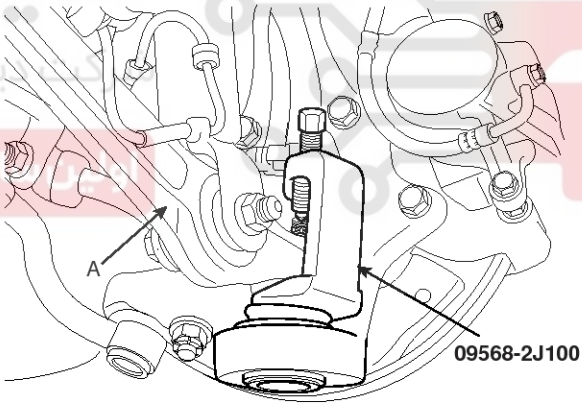

SBHSS8010D

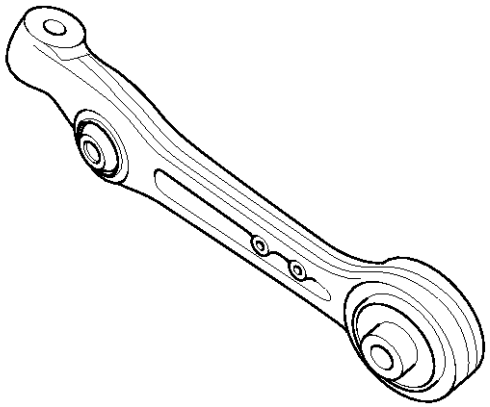

SBHSS8011D

Replacement the tension arm.

1. Remove the front wheel & tire.

Tightening torque:
90 ~ 110N.m (9.0 ~ 11.0kgf.m, 65 ~ 80lb-ft)

2. Loosen the bolt (A).

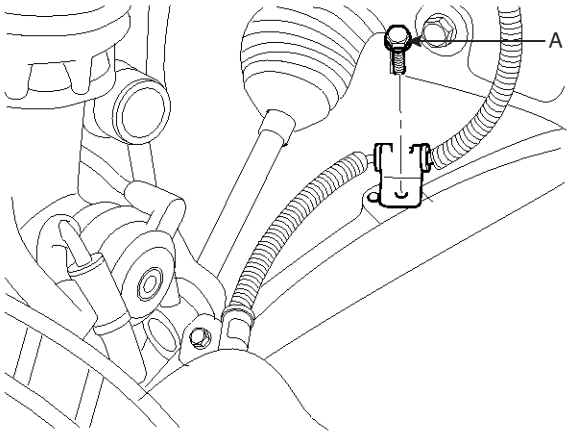

SBHSS8012D

3. Remove the split pin and castle nuts.

Tightening torque
Tie rod : 90 ~ 110N.m (9.0 ~ 11.0kgf.m, 65 ~ 80lb-ft)
Tension arm : 90 ~ 110N.m (9.0 ~ 11.0kgf.m, 65 ~ 80lb-ft)

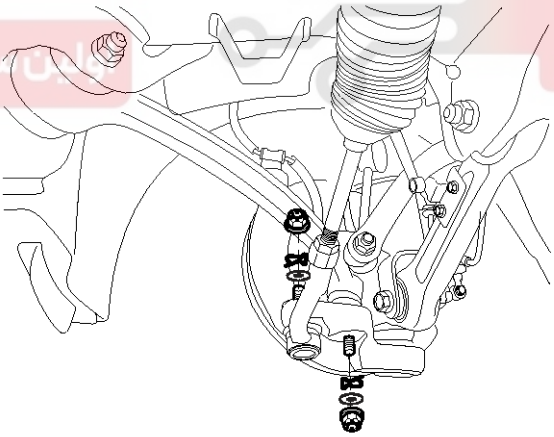

SBHSS9309L

4. 4. Disconnect the tension arm (B) with the front knuckle using a SST (09568-2J100).

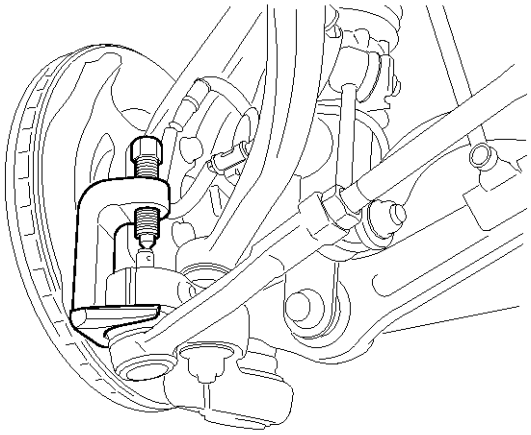

SBHSS9310L

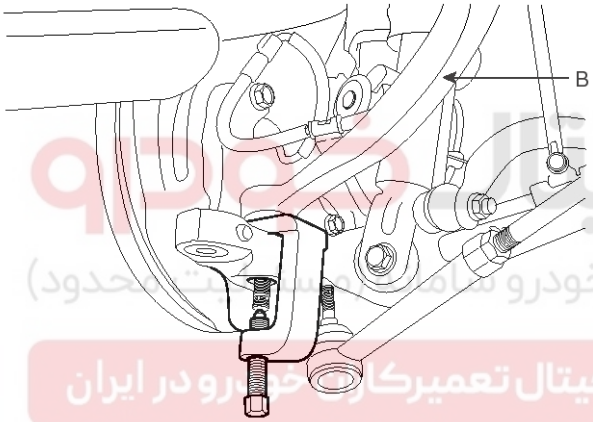

SBHSS8314D

5. Disconnect the tension arm (A) with the frame by loosening the flange bolts & lock nuts.

Tightening torque:
140 ~ 160N.m (14.0 ~ 16.0kgf.m, 101 ~ 116lb-ft)

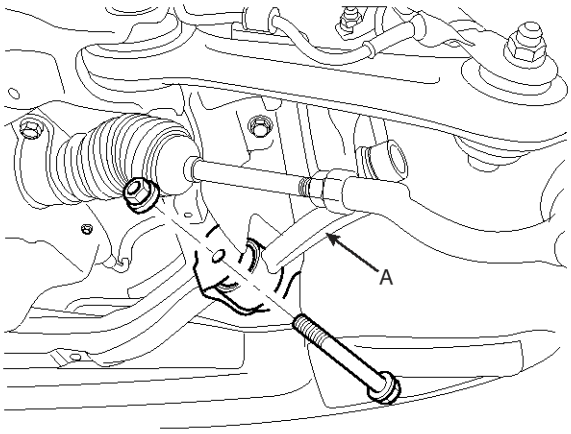

SBHSS8015D

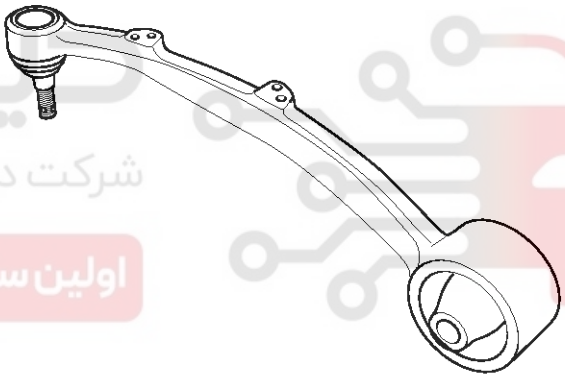

SBHSS8315D

6. Installation is the reverse of removal.

⚠CAUTION
Do not use the lock nuts again.

Inspection

1. Check the bushing for wear and deterioration.
2. Check the ball joint for rotating torque.

Front Stabilizer Bar

Replacement

1. Disconnect the stabilizer link (B) with the front strut assembly by loosening the nuts (A).

Tightening torque:
100 ~ 120N.m (10.0 ~ 12.0kgf.m, 72 ~ 87lb-ft)

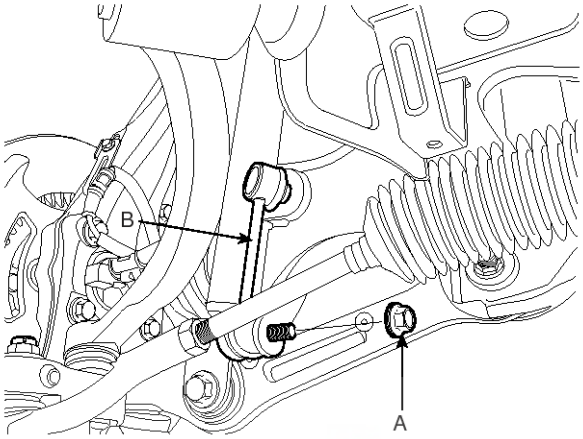

SBHSS8072D

2. Disconnect the stabilizer bar with the frame by loosening the bolts (A).

Tightening torque:
45 ~ 55N.m (4.5 ~ 5.5kgf.m, 33 ~ 40lb-ft)

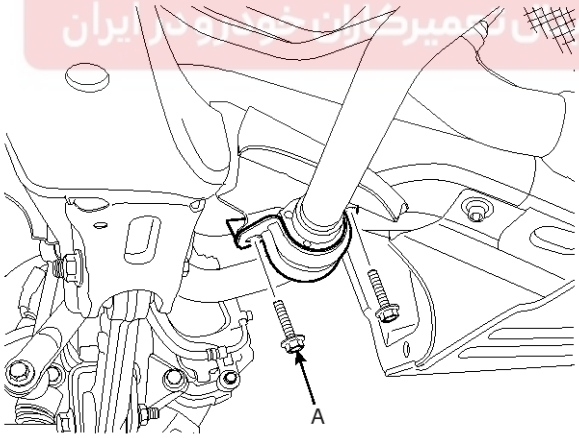

SBHSS8073D

3. Remove the stabilizer link (A), clamp (B), bushing (C).

Tightening torque:
100 ~ 120N.m (10.0 ~ 12.0kgf.m, 72 ~ 87lb-ft)

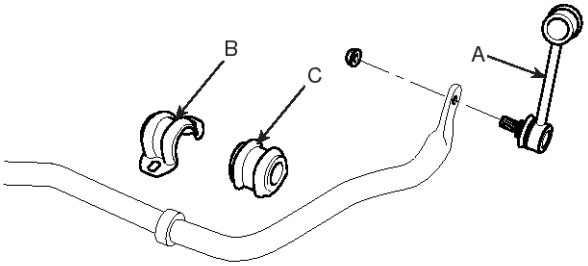

SBHSS8019D

4. Installation is the reverse of removal

⚠CAUTION
Do not use the lock nuts again.

Inspection

1. Check the bushing for wear and deterioration.
2. Check the ball joint for rotating torque.

Rear Air Suspension System

General Information

Specifications

Air spring

Items	Specification
Air spring volume at design position	2.2ℓ
Maximum outher bellow diameter	145 mm
Burst pressure	30.0 bar
Minimum operating temperature	-40℃
Maximum operating temperature	70℃

Height Sensor

Items	Specification
Required supply voltage	5 VDC 5%
Operation voltage	5 VDC 10%
Maximum allowed voltage range	20 V
Storage Temperature	-40℃ ~ 125℃

Tightening Torques

Item	Tightening torque (kgf.m)		
	N.m	kgf.m	lb-ft
Rear height sensor to frame	17 ~ 26	1.7 ~ 2.6	12 ~ 19
Rear height sensor to lower arm	17 ~ 26	1.7 ~ 2.6	12 ~ 19

Air Spring

Description

Because of the design layout, the air spring and the shock absorber (damper) is separated. The average (target) pressure of rear air spring for normal operation is around 8.5 bar.

When the rear air spring is delivered as service spare part, no air is filled so that the intensive care is required to handle. It will be explained more detail in the section of 'Caution of handling'.

Due to the stopper inside of spring, the upper end and lower end do not contact (gap exists around 10mm) each other even if the air is totally discharged.

Take care to handle the rear air spring. Don't pull the air spring intentionally, it may very difficult to restore to the original shape. If it was extended untended, a small amount of air pressure inside spring will help you pushing the spring to the original position.

Components

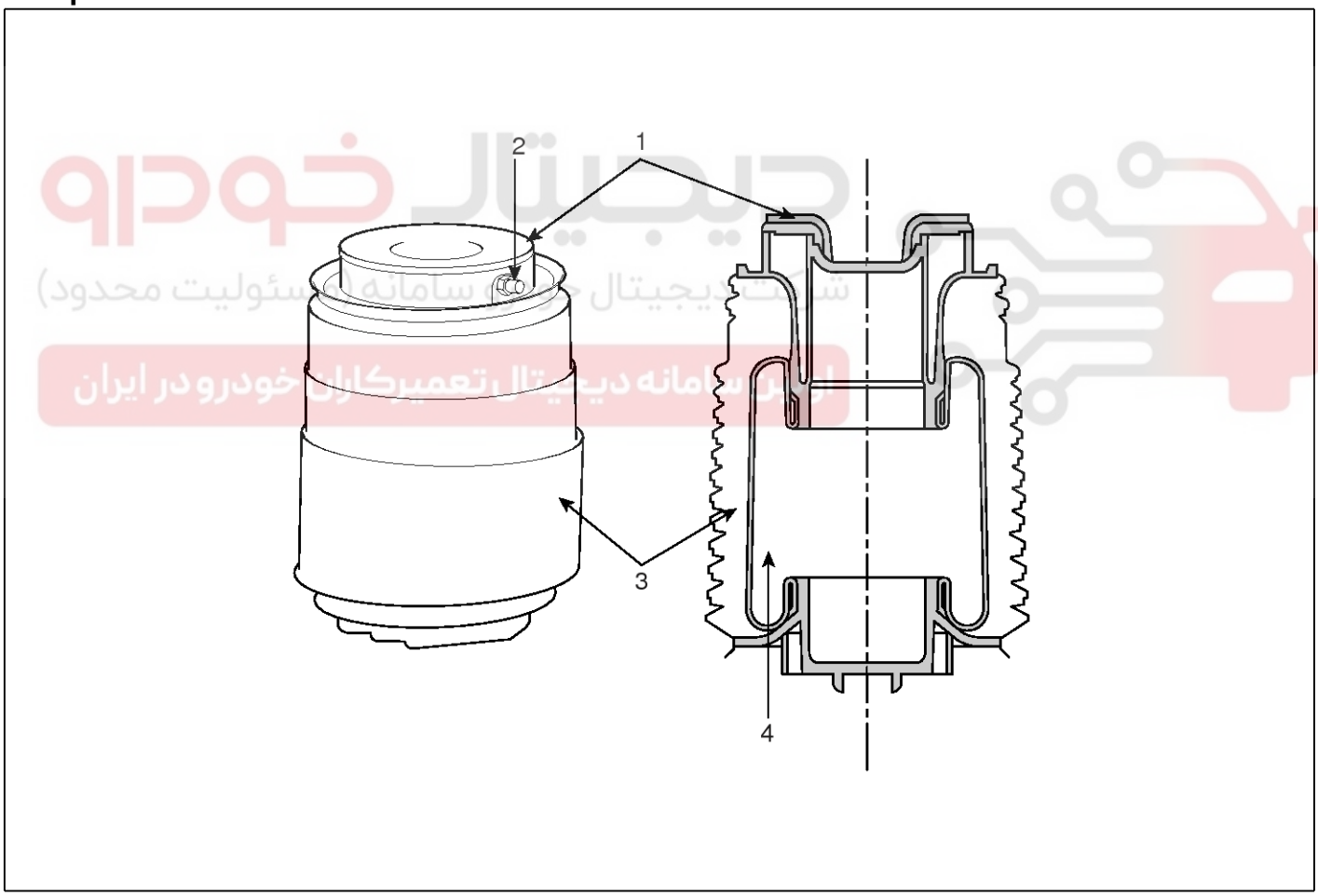

SBHSS8095D

1. Urethane pad
2. Connected to air tube
3. Protector
4. Air Spring

Replacement

1. Remove the rear wheel & tire.

Tightening torque:
90 ~ 110N.m (9.0 ~ 11.0kgf.m, 65 ~ 80lb-ft)

2. Remove the air tube.

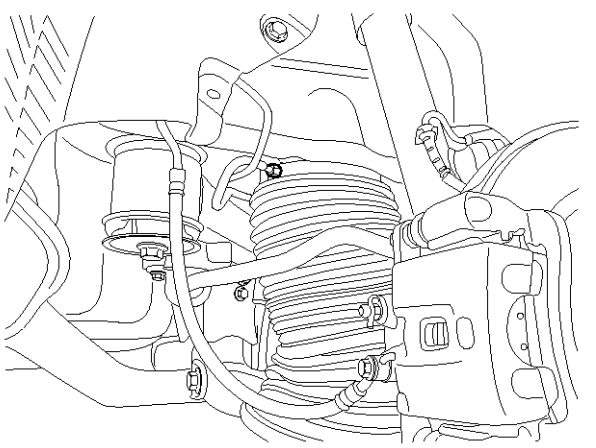

SBHSS8055D

NOTICE
Take car due to the high pressure air in the spring is discharged.

3. Disconnect the rear height sensor & stabilizer link with the lower arm.

Tightening torque
Height sensor : 4 ~ 6N.m (0.4 ~ 0.6kgf.m, 3 ~ 4lb-ft)
Stabilizer link : 50 ~ 65N.m (5.0 ~ 6.5kgf.m, 36 ~ 47lb-ft)

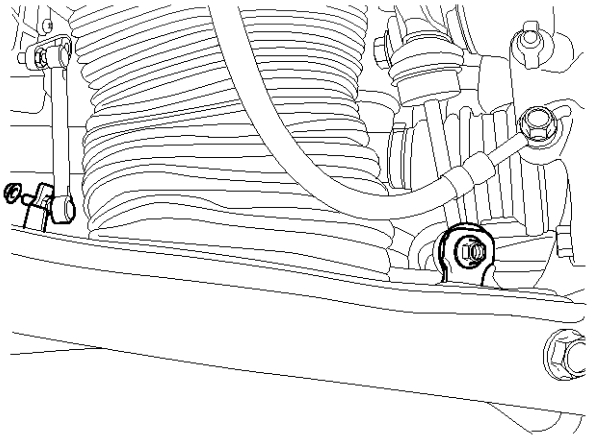

SBHSS8056D

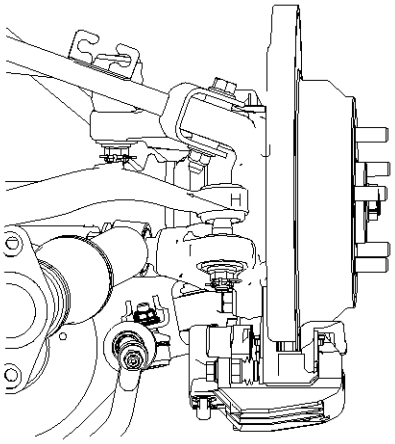

SBHSS8377D

4. Loosen the cam bolt (A) & nuts (B).

Tightening torque
Axle : 140 ~ 160N.m (14.0 ~ 16.0kgf.m, 101 ~ 116lb-ft)
Damper : 100 ~ 120N.m (10.0 ~ 12.0kgf.m, 72 ~ 87lb-ft)

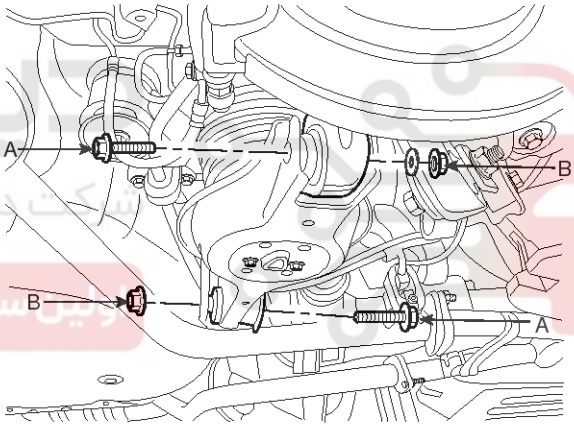

SBHSS8057D

5. Loosen the cam bolt (A).

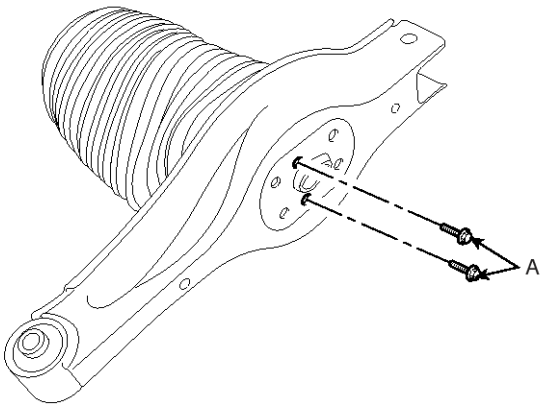

SBHSS8058D

6. Installation is the reverse of removal.

CAUTION

- **Take care not to twist upper and lower.**
- **After transportaion, check the cleanliness.**
- **Check the cap which prevents entering foreign materials on the connector of air filling portion.**
- **Take care due to it is bended or defamed easily by external force.**

Height Sensor

Components

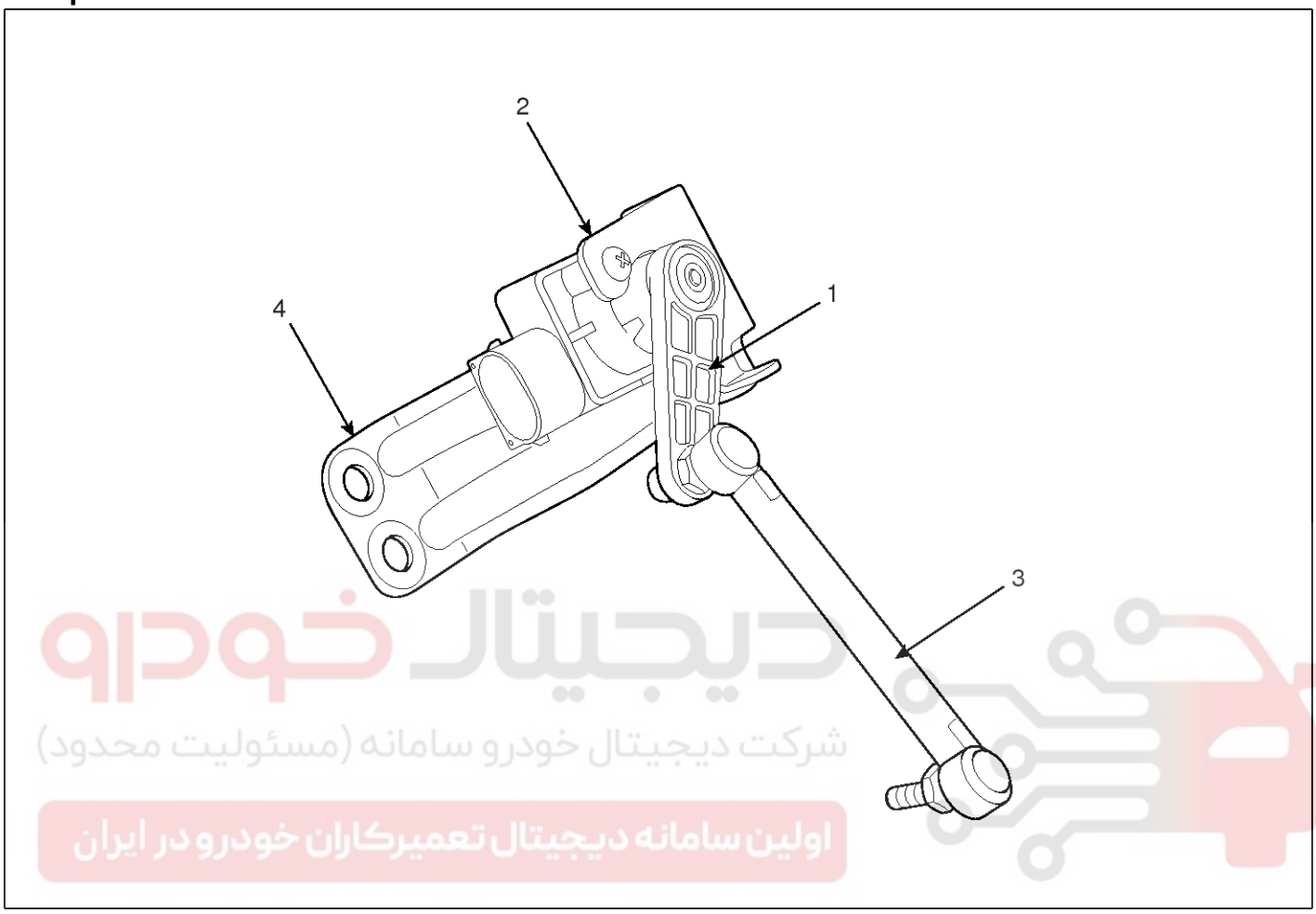

SBHSS8063D

1. Lever
2. Height sensor
3. Rod
4. Bracket

Replacement

1. Remove the rear wheel & tire.

Tightening torque:
90 ~ 110N.m (9.0 ~ 11.0kgf.m, 65 ~ 80lb-ft)

2. Loosen the nuts.

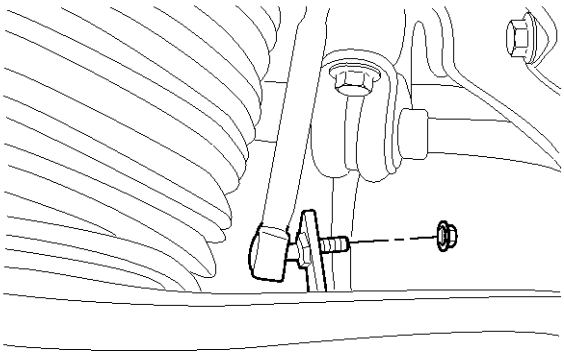

SBHSS8064D

3. Remove the bolt & connector.

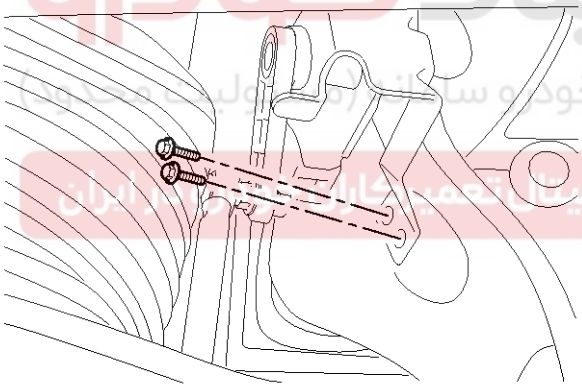

SBHSS8065D

4. Installation is the reverse of removal.

⚠CAUTION
Because fragile, take care not to damaged.

Rear Upper Arm

Replacement

1. Remove the rear wheel & tire.

Tightening torque:
90 ~ 110N.m (9.0 ~ 11.0kgf.m, 65 ~ 80lb-ft)

2. Support the lower portion of the rear axle with a jack securely.
3. Remove the split pin and castle nuts (A).

Tightening torque:
80 ~ 90N.m (8.0 ~ 9.0kgf.m, 58 ~ 65lb-ft)

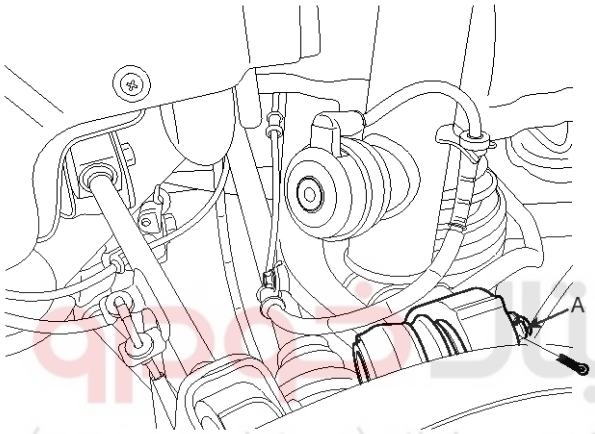

SBHSS8022D

4. Disconnect the rear upper arm with the rear carrier using a SST (09568-2J100).

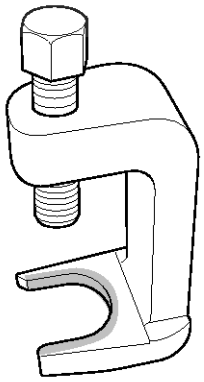

SBHSS8307D

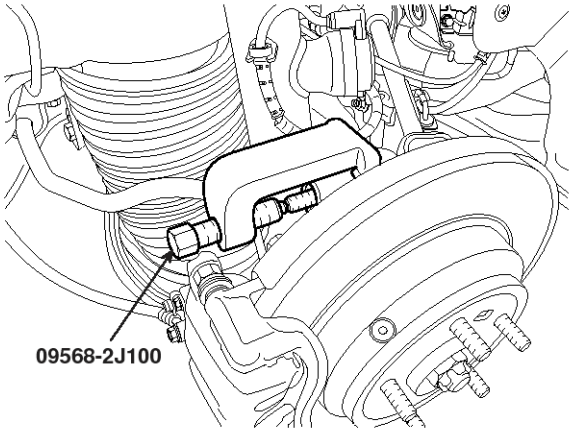

SBHSS8023D

5. Loosen the flange bolt & lock nuts.

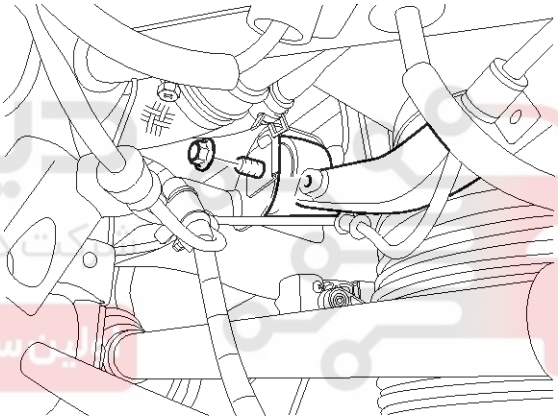

SBHSS9311L

6. Installation is the reverse of removal.

⚠CAUTION
Do not use the lock nuts again.

Inspection

1. Check the bushing for wear and deterioration.
2. Check the ball joint for rotating torque.

Rear Assist Arm

Replacement

1. Remove the rear wheel & tire.

Tightening torque:
90 ~ 110N.m (9.0 ~ 11.0kgf.m, 65 ~ 80lb-ft)

2. Remove the split pin and castle nuts (A).

Tightening torque:
80 ~ 90N.m (8.0 ~ 9.0kgf.m, 58 ~ 65lb-ft)

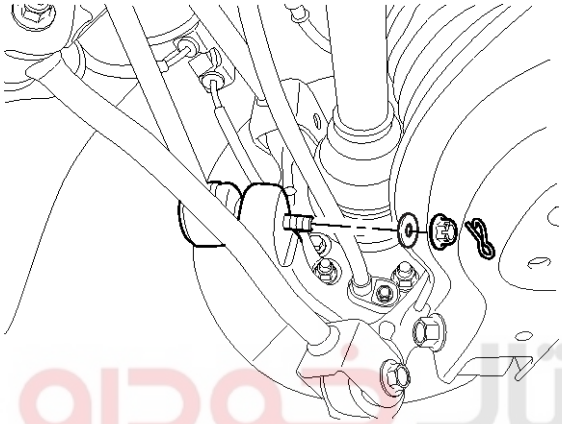

SBHSS8051D

3. Disconnect the rear assist arm with the rear carrier using a SST (09568-2J100).

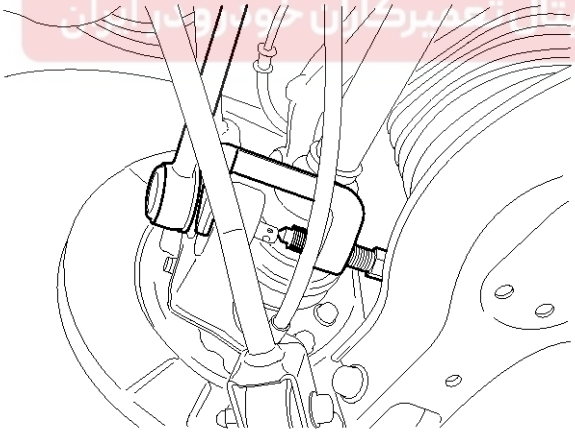

SBHSS8096D

4. Loosen the bolt & lock nuts.

Tightening torque:
100 ~ 120N.m (10.0 ~ 12.0kgf.m, 72 ~ 87lb-ft)

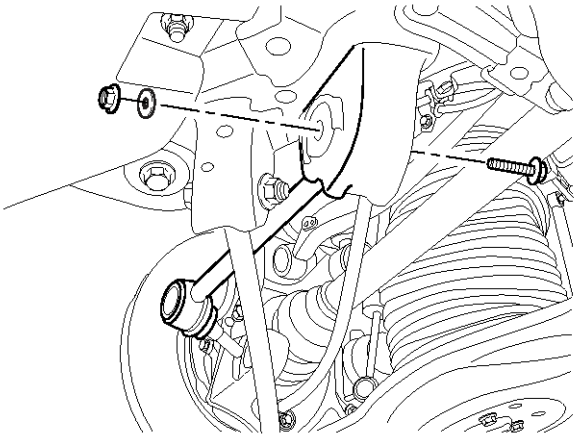

SBHSS8052D

5. Installation is the reverse of removal.

Inspection

1. Check the bushing for wear and deterioration.
2. Check the ball joint for rotating torque.

Trailing Arm

Replacement

1. Remove the rear wheel & tire.

Tightening torque:
90 ~ 110N.m (9.0 ~ 11.0kgf.m, 65 ~ 80lb-ft)

2. Loosen the bolt & lock nuts.

Tightening torque:
100 ~ 120N.m (10.0 ~ 12.0kgf.m, 72 ~ 87lb-ft)

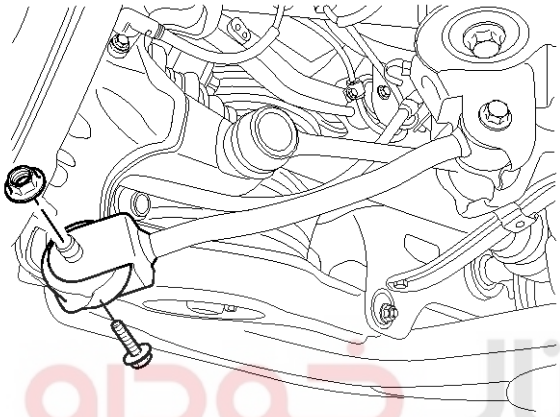

SBHSS8053D

3. Loosen the flange bolt & lock nuts.

Tightening torque:
100 ~ 120N.m (10.0 ~ 12.0kgf.m, 72 ~ 87lb-ft)

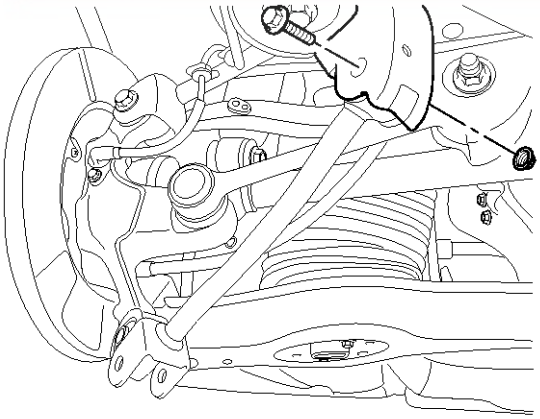

SBHSS8054D

4. Installation is the reverse of removal.

⚠CAUTION
Do not use the lock nuts again.

Inspection

1. Check the bushing for wear and deterioration.

Rear Lower Arm

Replacement

1. Remove the rear wheel & tire.

Tightening torque:
90 ~ 110N.m (9.0 ~ 11.0kgf.m, 65 ~ 80lb-ft)

2. Remove the air tube.

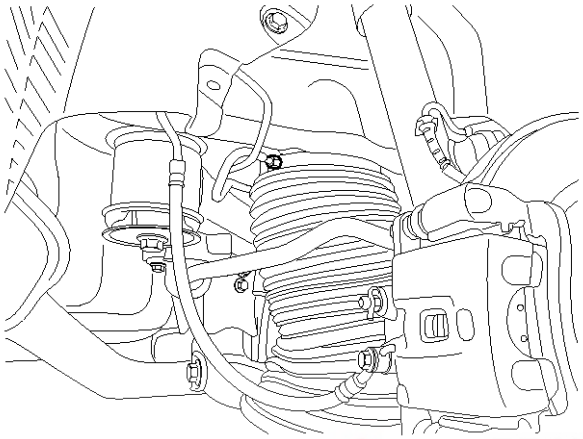

SBHSS8055D

NOTICE
Take car due to the high pressure air in the spring is discharged.

3. Disconnect the rear height sensor & stabilizer link with the lower arm.

Tightening torque
Height sensor : 4 ~ 6N.m (0.4 ~ 0.6kgf.m, 3 ~ 4lb-ft)
Stabilizer link : 50 ~ 65N.m (5.0 ~ 6.5kgf.m, 36 ~ 47lb-ft)

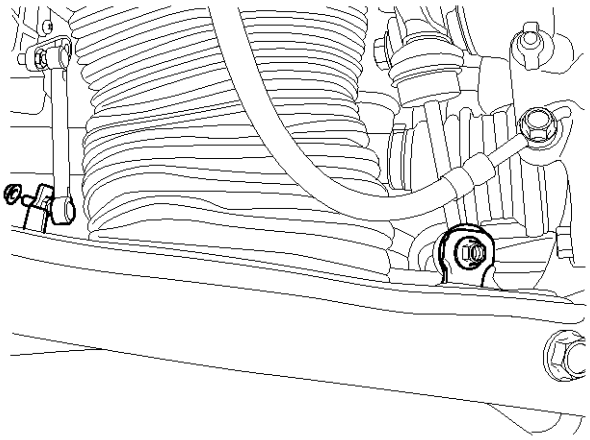

SBHSS8056D

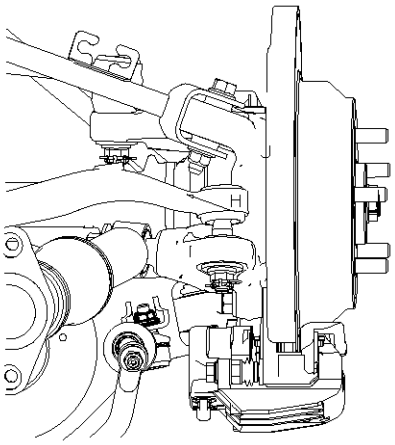

SBHSS8377D

4. Loosen the cam bolt (A) & nuts (B).

Tightening torque
Axle : 140 ~ 160N.m (14.0 ~ 16.0kgf.m, 101 ~ 116)
Damper : 100 ~ 120N.m (10.0 ~ 12.0kgf.m, 72 ~ 87lb-ft)

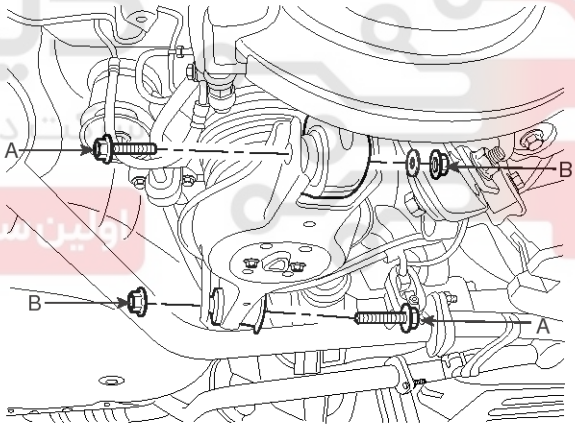

SBHSS8057D

5. Installation is the reverse of removal.

Inspection

1. Check the bushing for wear and deterioration.

Rear Stabilizer Bar

Replacement

1. Remove the rear wheel & tire.

Tightening torque:
90 ~ 110N.m (9.0 ~ 11.0kgf.m, 65 ~ 80lb-ft)

2. Loosen the nuts (A).

Tightening torque:
50 ~ 65N.m (5.0 ~ 6.5kgf.m, 36 ~ 47lb-ft)

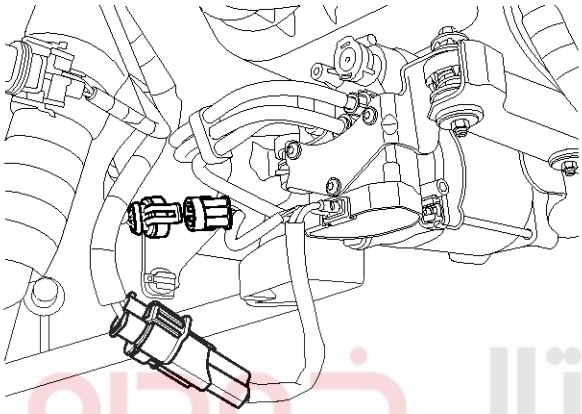

SBHSS9312L

3. Loosen the bolts (A).

Tightening torque:
45 ~ 55N.m (4.5 ~ 5.5kgf.m, 33 ~ 40lb-ft)

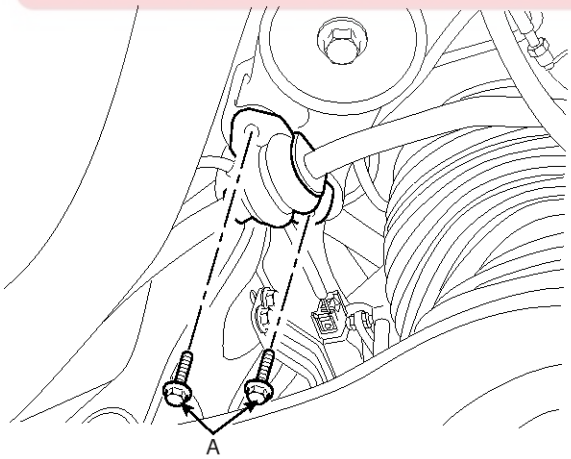

SBHSS8060D

4. Disconnect the rear stabilizer link with the stabilizer bar.

Tightening torque:
50 ~ 65N.m (5.0 ~ 6.5kgf.m, 36 ~ 47lb-ft)

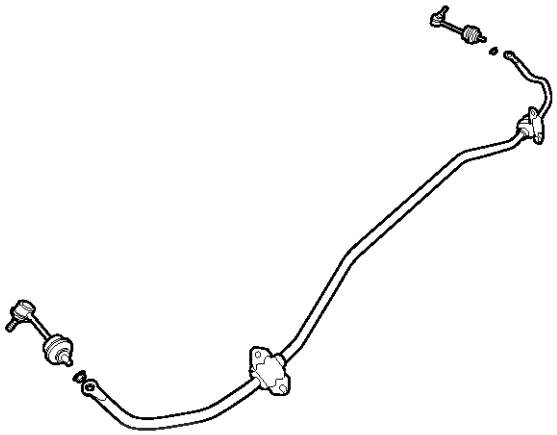

SBHSS8061D

5. Installation is the reverse of removal.

ECU

Description

Analyzes each variety sensor and communication data and executes air suspension control.

That part controls system and maintains function.

Replacement

CAUTION

- **Avoid suffering excessive impact.**
- **Do not entering the water into pin inside.**
- **Do not pile up the parts.**
- **Take care not to damage the pin of connecting portion of connector.**

1. Remove the transverse trim. (Refer to BD group)
2. Remove the luggage side trim. (Refer to BD group)
3. Remove the connector (A), bolt (B), nut (C) by then remove the ECU.

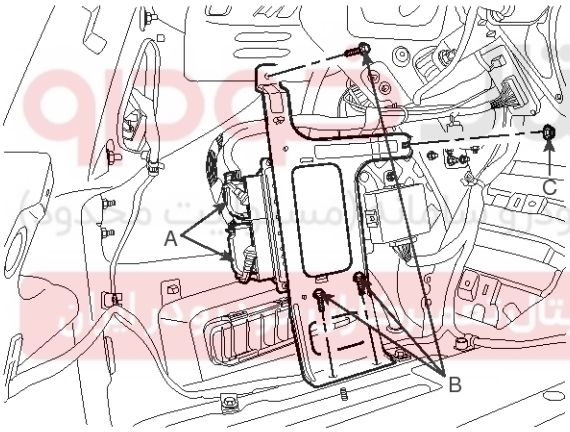

SBHSS8049D

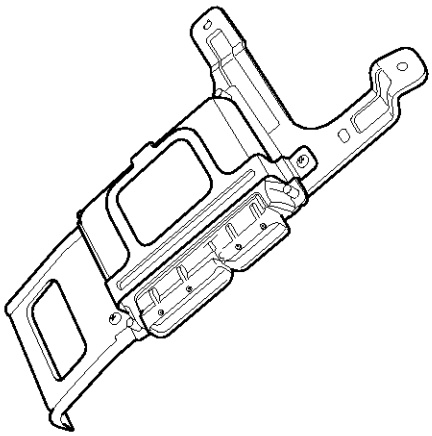

SBHSS8050D

4. Installation is the reverse of removal.

Diagnostic Trouble Codes (DTC)

DTC	Trouble description
C1101	Battery Voltage High
C1102	Battery Voltage Low
C1230	Pressure sensor
C1243	Height Sensor-Front Left
C1246	Height Sensor Supply Voltage Failure-LH
C1247	Height Sensor-Front Right
C1250	Height Sensor Supply Voltage Failure-RH
C1251	Height Sensor-Rear Left
C1255	Height Sensor-Rear Right
C1260	Steering Angle Sensor Circuit-Signal
C1278	Acceleration Sensor Front–LH Malfunction
C1279	Acceleration Sensor Front–RH Malfunction
C1281	Acceleration Sensor Rear
C1284	Acceleration Sensor Voltage Failure
C1502	ECS Switch Fault
C1514	Valve Switch-On Time Exceeded
C1525	ECS Switch Signal Line Open/Short
C1604	ECU Hardware Error
C1611	CAN Time-out ECM
C1612	CAN Time-out TCM
C1616	CAN Bus off
C1620	1st set-up not completed(Height Sensor)
C1623	CAN Time-out Steering Angle Sensor
C1625	CAN Time-out ABS/ESC(ESP)
C1640	CAN Time-out Cluster
C1641	CAN signal error ECM
C1642	CAN signal error ESC(ESP)
C1646	CAN Message Failure-TCU
C1702	Variant Coding Error
C1706	A Vehicle Body Distortion
C1707	A Vehicle Body Lopsidedness
C1708	Level Control Disabled
C1709	Level Control Out of Range / Target Level not Applicable
C1710	ALI Not Completed

DTC	Trouble description
C2108	Compressor Relay
C2203	CDC Actuator Failure-FL
C2204	CDC Actuator Failure-FR
C2205	CDC Actuator Failure-RL
C2206	CDC Actuator Failure-RR
C2302	Air Spring Valve-FL Open/Short
C2303	Air Spring Valve-FR Open/Short
C2306	Air Spring Valve-RL Open/Short
C2307	Air Spring Valve-RR Open/Short
C2338	Reverse Valve 1 Failure
C2339	Reverse Valve 2 Failure
C2342	Ambience Valve Failure
C2409	Compressor Over temperature Detected

C1101 Battery Voltage High

Component Location

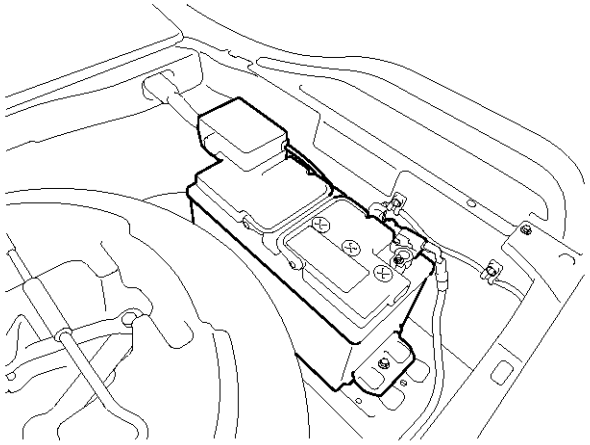

SBHSS8349D

General Description

The ECS is the abbreviation for "Electronic Control Suspension". This ECS system automatically controls the height of a vehicle level and the damping force of shock absorbers according to road condition. So it improves riding comfort and steering stability. Among components of the ECS system, a battery has the role of supplying of electric power to compressor and ECS ECU. And the ECS ECU monitors the battery voltage in order to control this system normally.

DTC Description

The ECS ECU monitors the voltage of battery and if it stays more than 16 Volts, this DTC is set.

DTC Detecting Condition

Item		Detecting Condition	Possible cause
DTC Strategy		• Monitoring the voltage of battery	• Poor connection in the power supply circuit • Faulty Alternator
Threshold value		• When Battery voltage is more than 16V during over 30 seconds - In a case that it drops below 15V, the system returns to normal.	
Fail-Safe	Airspring	• Inhibition of controlling a vehicle level	
	CDC damper	• Stopping the CDC damper's output (0 mA)	

Specification

Normal Voltage Range	IGN "ON" or Engine "ON"
	10V ~ 16V

Diagnostic Circuit Diagram

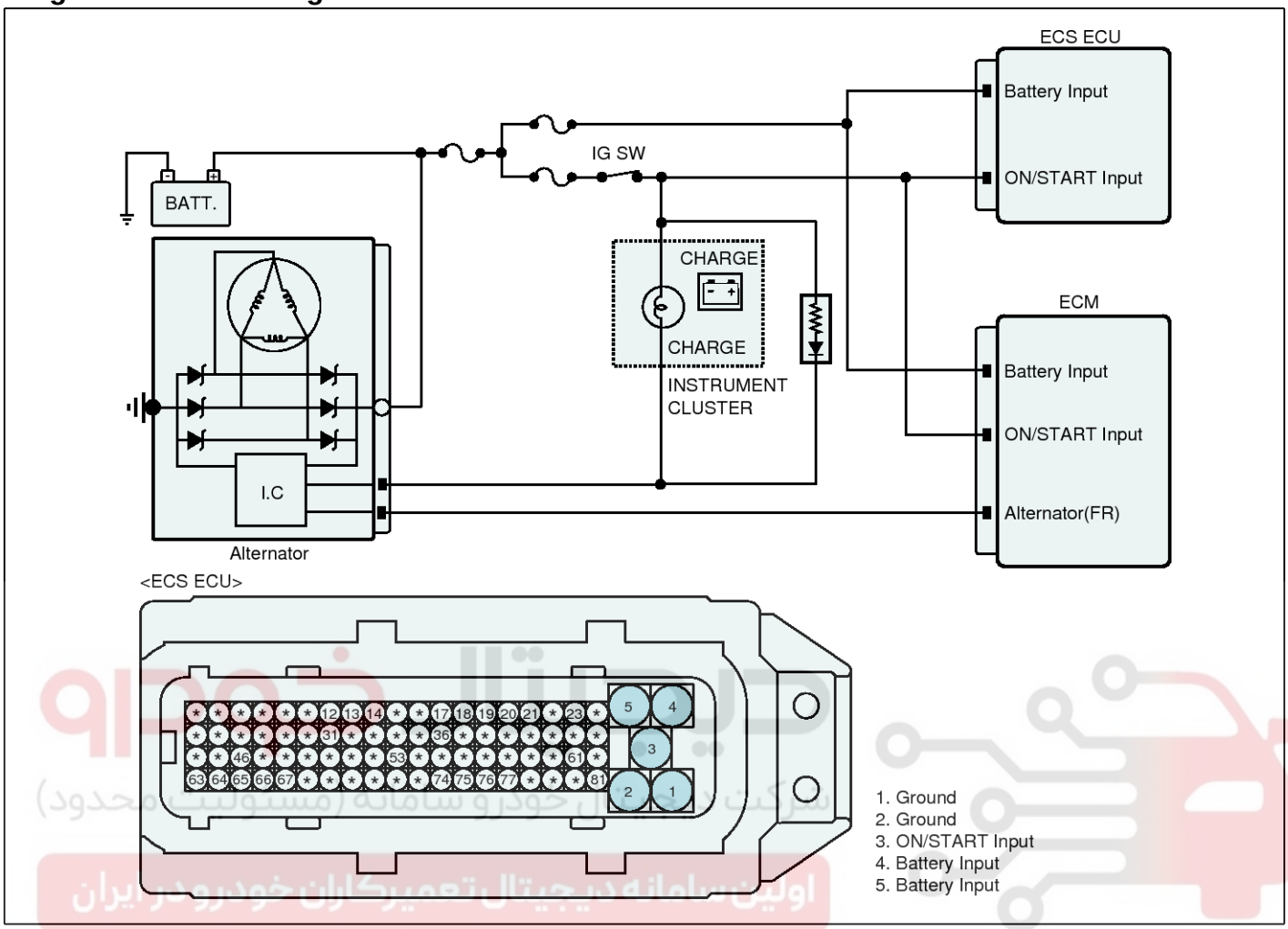

SBHSS9600L

Monitor Scantool Data

1. Connect scantool to Data Link Connector(DLC).
2. IG ON or Engine ON
3. Monitor the "BATTERY VOLTAGE" parameter on the scantool.

Specifications : 10 ~ 16 V(IGN ON or Engine ON)

Current Data

Standard Display | Full List | Graph | Items List | Reset Min.Max. | Record | Stop | VSS

Sensor Name	Value	Unit
Battery Voltage	13.6	V

Fig.1

SBHSS9500L

Fig 1) Normal data at the idle state

4. Is the battery voltage normal?

YES ▶ Fault is intermittent caused by poor connection in ECS ECU's connector or was repaired and ECS ECU memory was not cleared. Thoroughly check connectors for looseness, poor connection, bending, corrosion, contamination, deterioration, or damage.
▶ Repair or replace as necessary and then go to "Verification of Vehicle Repair" procedure.

NO ▶ Go to "Terminal and Connector Inspection" procedure.

Terminal and Connector Inspection

1. Many malfunctions in the electrical system are caused by poor harness(es) and terminal condition.

   Faults can also be caused by interference from other electrical systems, and mechanical or chemical damage.
2. Thoroughly check connectors for looseness, poor connection, bending, corrosion, contamination, deterioration, or damage.
3. Has a problem been found?

YES ▶ Repair as necessary and then go to "Verification of Vehicle Repair" procedure.

NO ▶ Confirm the DTC status at another system to be able to confirm C1101 or DTC code ralated to over voltage.
▶ If there is no C1101 code at another system, Go to "Power Circuit Inspection" procedure.
▶ If there is C1101 or DTC code ralated to over voltage at another system, Go to "Alternator Output Voltage Inspection" procedure.

Alternator Output Voltage Inspection

■ Check charging system

1. Start Engine.
2. Maintain ENG RPM 2,500RPM over 2 minutes.
3. Measure voltage between the battery terminal(+) and the battery terminal(-).

Specification : 10 ~ 16V

4. Is the measured value within specifications?

YES ▶ Go to "Power Circuit Inspection" procedure.

NO ▶ Check that the tension of drive belt, ENG RPM, fuse, terminal of battery, all terminals of alternator are in good condition and Check for damaged harness and poor connection between alternator and battery.
▶ If OK, repair or replace alternator and then go to "Verification of vehicle Repair" procedure.

Power Circuit Inspection

■ Check for open or short

1. IG "ON" & Engine "OFF"
2. Measure voltage between the battery terminal(+) and power terminal of the ECS ECU harness connector.

Specification : Approx. below 0.2V

3. Is the measured value within specifications?

YES ▶ Go to "Ground Circuit Inspection" procedure.

NO ▶ Check for open or blown fuse referring to " Circuit Diagram".
▶ Repair open or short in power circuit between battery and ECS ECU harness connector and then go to "Verification of vehicle Repair" procedure.

Ground Circuit Inspection

■ Check for open or short

1. IG "OFF".
2. Disconnect ECS ECU connector.
3. Measure resistance between ground terminal of the ECS ECU harness connector and chassis ground.

Specification : Approx. below 1Ω

4. Is the measured value within specifications?

YES ▶ Substitute with a known-good ECS ECU and check for proper operation. If problem is corrected, replace ECS ECU and then go to "Verification of Vehicle Repair" procedure.
※ In a case of replacing ECS ECU, operate ECU Variant coding and height sensor's calibration by scantool

NO ▶ Repair open or short in ground circuit between ECS ECU harness connector and chassis ground, and then go to "Verification of vehicle Repair" procedure.

Verification of Vehicle Repair

After a repair, it is essential to verify that the fault has been corrected.

1. Connect scantool and select "Diagnostic Trouble Codes(DTCs)" mode
2. Using a scantool, Clear DTC.
3. Operate the vehicle within DTC Detecting Condition in General Information.
4. Using a scantool, Check DTC present.
5. Are any DTCs present ?

YES ▶ Go to the applicable troubleshooting procedure.

NO ▶ System performing to specification at this time.

C1102 Battery Voltage Low

Component Location

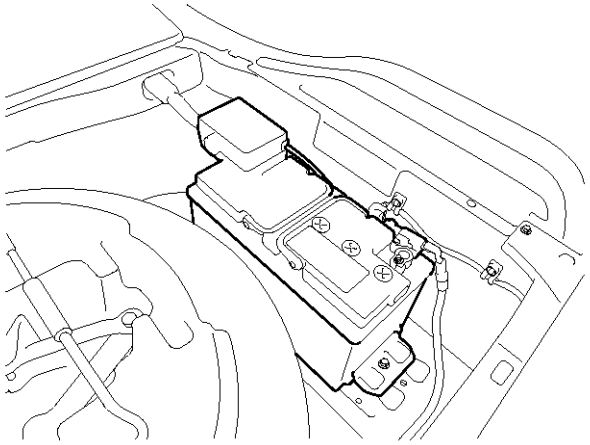

SBHSS8349D

General Description

The ECS is the abbreviation for "Electronic Control Suspension". This ECS system automatically controls the height of a vehicle level and the damping force of shock absorbers according to road condition. So it improves riding comfort and steering stability. Among components of the ECS system, a battery has the role of supplying of electric power to compressor and ECS ECU. And the ECS ECU monitors the battery voltage in order to control this system normally.

DTC Description

The ECS ECU monitors the voltage of battery and if it stays below certain value, this DTC is set.

DTC Detecting Condition

Item		Detecting Condition	Possible cause
DTC Strategy		• Monitoring the voltage of battery	• Open or short to Ground in the power supply circuit
Threshold value		• When Battery voltage is below 10V during over 30 seconds - In a case that it rises above 11V, the system returns to normal. • When Battery voltage is below 3V during over 0.5 second - In a case that it rises above 4V, the system returns to normal.	
Fail-Safe	Airspring	• Inhibition of controlling a vehicle level	
	CDC damper	• Stopping the CDC damper's output (0 mA)	

Specification

Normal Voltage Range	IGN "ON" or Engine "ON"
	10V ~ 16V

Diagnostic Circuit Diagram

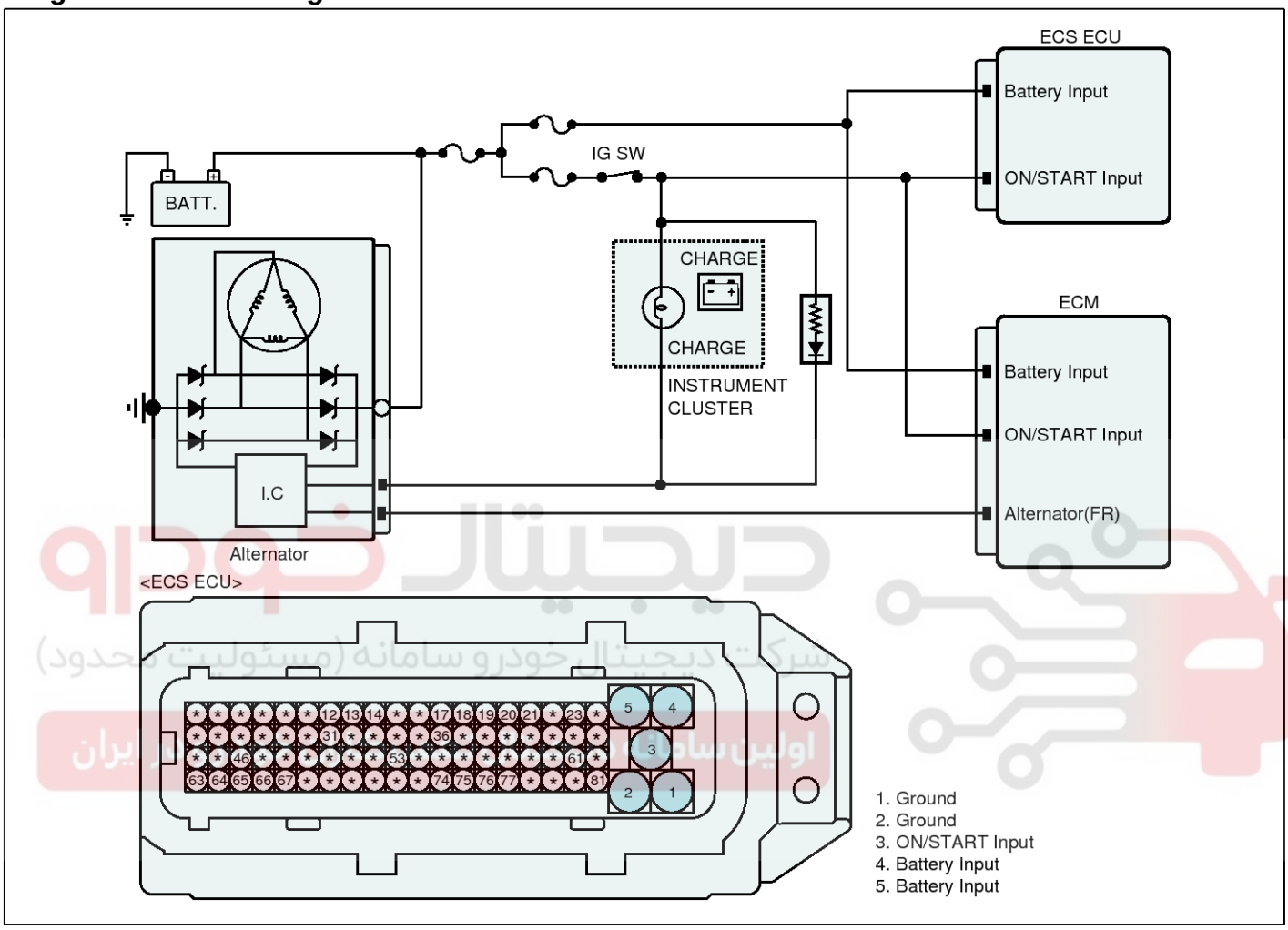

SBHSS9600L

Monitor Scantool Data

1. Connect scantool to Data Link Connector(DLC).
2. IG ON or Engine ON
3. Monitor the "BATTERY VOLTAGE" parameter on the scantool.

Specifications : 10 ~ 16 V(IGN ON or Engine ON)

Current Data

Standard Display | Full List | Graph | Items List | Reset Min.Max. | Record | Stop | VSS

Sensor Name	Value	Unit
Battery Voltage	13.6	V

Fig.1

SBHSS9500L

Fig 1) Normal data at the idle state

4. Is the battery voltage normal?

YES ▶ Fault is intermittent caused by poor connection in ECS ECU's connector or was repaired and ECS ECU memory was not cleared. Thoroughly check connectors for looseness, poor connection, bending, corrosion, contamination, deterioration, or damage.
▶ Repair or replace as necessary and then go to "Verification of Vehicle Repair" procedure.

NO ▶ Go to "Terminal and Connector Inspection" procedure.

Terminal and Connector Inspection

1. Many malfunctions in the electrical system are caused by poor harness(es) and terminal condition.
   Faults can also be caused by interference from other electrical systems, and mechanical or chemical damage.
2. Thoroughly check connectors for looseness, poor connection, bending, corrosion, contamination, deterioration, or damage.
3. Has a problem been found?

YES ▶ Repair as necessary and then go to "Verification of Vehicle Repair" procedure.

NO ▶ Go to "Alternator Output Voltage Inspection" procedure.

Alternator Output Voltage Inspection

■ Check charging system

1. Start Engine.
2. Maintain ENG RPM 2,500RPM over 2 minutes.
3. Measure voltage between the battery terminal(+) and the battery terminal(-).

Specification : 10 ~ 16V

4. Is the measured value within specifications?

YES ▶ Go to "Power Circuit Inspection" procedure.

NO ▶ Check that the tension of drive belt, ENG RPM, fuse, terminal of battery, all terminals of alternator are in good condition and Check for damaged harness and poor connection between alternator and battery.
▶ If OK, repair or replace alternator and then go to "Verification of vehicle Repair" procedure.

Power Circuit Inspection

■ Check for open or short

1. IG "ON" & Engine "OFF"
2. Measure voltage between the battery terminal(+) and power terminal of the ECS ECU harness connector.

Specification : Approx. below 0.2V

3. Is the measured value within specifications?

YES ▶ Go to "Ground Circuit Inspection" procedure.

NO ▶ Check for open or blown fuse referring to " Circuit Diagram".
▶ Repair open or short in power circuit between battery and ECS ECU harness connector and then go to "Verification of vehicle Repair" procedure.

Ground Circuit Inspection

■ Check for open or short

1. IG "OFF".
2. Disconnect ECS ECU connector.
3. Measure resistance between ground terminal of the ECS ECU harness connector and chassis ground.

Specification : Approx. below 1Ω

4. Is the measured value within specifications?

YES ▶ Substitute with a known-good ECS ECU and check for proper operation. If problem is corrected, replace ECS ECU and then go to "Verification of Vehicle Repair" procedure.
※ In a case of replacing ECS ECU, operate ECU Variant coding and height sensor's calibration by scantool

NO ▶ Repair open or short in ground circuit between ECS ECU harness connector and chassis ground, and then go to "Verification of vehicle Repair" procedure.

Verification of Vehicle Repair

After a repair, it is essential to verify that the fault has been corrected.

1. Connect scantool and select "Diagnostic Trouble Codes(DTCs)" mode
2. Using a scantool, Clear DTC.
3. Operate the vehicle within DTC Detecting Condition in General Information.
4. Using a scantool, Check DTC present.
5. Are any DTCs present ?

YES ▶ Go to the applicable troubleshooting procedure.

NO ▶ System performing to specification at this time.

C1230 Pressure sensor

Component Location

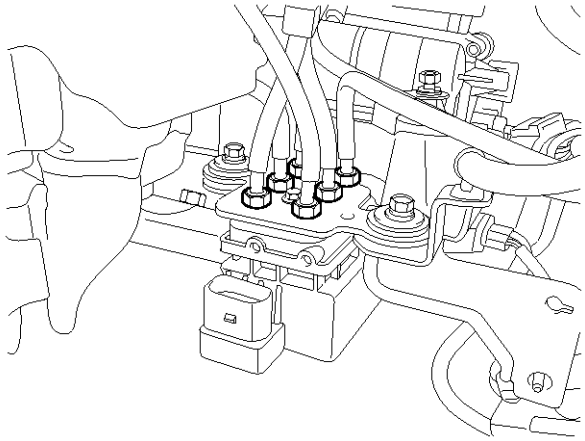

SBHSS8350D

General Description

Pressure Sensor is installed within Solenoid Valve Assay. Its role is to measure the pressure of the inner solenoid valve assay. As this sensor is pressured from the outside, an electrostatic capacity changes and this causes output's voltage to change. This sensor's output is analog signal which is in proportional to power supply and the control unit(ECS ECU) recognizes the pressure value as a percentage of signal value against power supply.

DTC Description

The ECS ECU monitors the pressure sensor's signal and if it is out of normal range, this DTC is set.

DTC Detecting Condition

Item		Detecting Condition	Possible cause
DTC Strategy		• Monitoring the voltage of pressure sensor	• Open or short in the pressure sensor circuit • Faulty pressure sensor
Threshold value		• When the Pressure sensor's output voltage is less than 0.2V or more than 4.8V during over 2 seconds • When there are no input signals during 12 times and the battery voltage is above 10V • During one ignition cycle, when the air-charging fails 4 times	
Fail-Safe	Airspring	• Inhibition of controlling the upward level of vehicle	
	CDC damper	• -	

Diagnostic Circuit Diagram

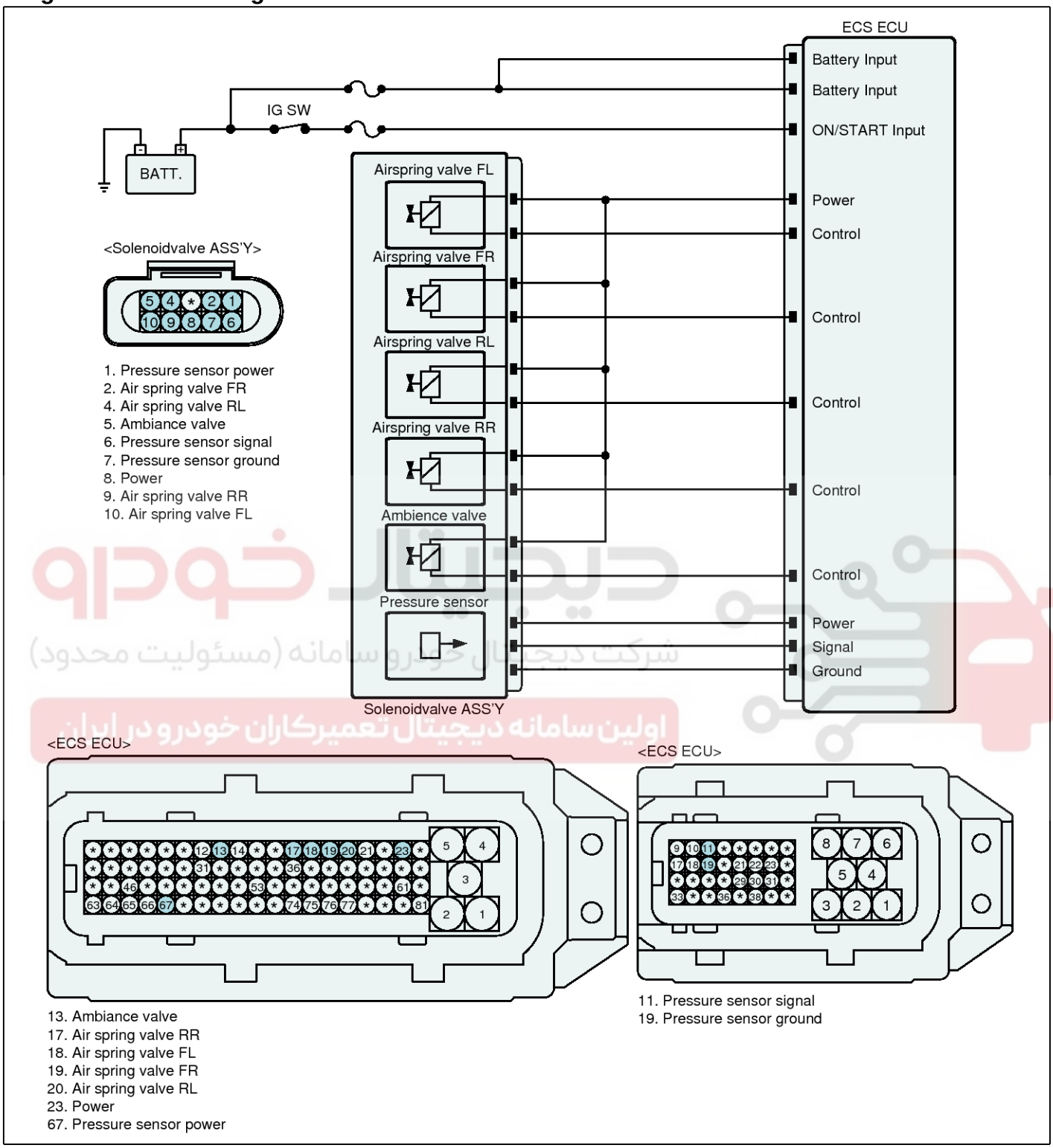

SBHSS9601L

Terminal and Connector Inspection

1. Many malfunctions in the electrical system are caused by poor harness(es) and terminal condition.

   Faults can also be caused by interference from other electrical systems, and mechanical or chemical damage.
2. Thoroughly check connectors for looseness, poor connection, bending, corrosion, contamination, deterioration, or damage.
3. Has a problem been found?

YES ▶ Repair as necessary and then go to "Verification of Vehicle Repair" procedure.

NO ▶ Go to "Power Circuit Inspection" procedure.

Power Circuit Inspection

■ Check for open

1. IG "ON"
2. Disconnect pressure sensor connector.
3. Measure voltage between the power terminal of the pressure sensor and chassis ground.

Specification : Approx. 5V

4. Is the measured value within specifications?

YES ▶ Go to "Signal Circuit Inspection" procedure.

NO ▶ Repair open in power circuit between pressure sensor and ECS ECU harness connector and then go to "Verification of vehicle Repair" procedure.

Signal Circuit Inspection

■ Check for short

1. IG "OFF"
2. Disconnect pressure sesnro connector and ECS ECU connector.
3. Measure resistance between power terminal and signal terminal of pressure sensor harness connector.
4. Measure resistance between ground terminal and signal terminal of pressure sensor harness connector.

Specification : Infinite

5. Is the measured value within specifications?

YES ▶ Go to "Check for open" procedure.

NO ▶ Repair open in signal circuit between pressure sensor and ECS ECU harness connector and then go to "Verification of vehicle repair" procedure.

■ Check for open

1. IG "OFF"
2. Disconnect pressure sensor connector and ECS ECU connector.
3. Measure resistance between signal terminal of pressure sensor harness connector and signal terminal of ECS ECU harness connector.

Specification : Below Approx. 1Ω

4. Is the measured value within specifications?

YES ▶ Go to "Ground Circuit Inspection" procedure.

NO ▶ Repair open in the signal circuit between ECS ECU harness connector and pressure sensor harness connector and then go to "Verification of vehicle repair" procedure.

Ground Circuit Inspection

■ Check for open

1. IG "OFF"
2. Disconnect pressure sensor connector and ECS ECU connector.
3. Measure resistance between ground terminal of pressure sensor harness connector and ground terminal of ECS ECU harness connector.

Specification : Below approx. 1Ω

4. Is the measured value within specifications?

YES ▶ Go to "Component Inspection" procedure.

NO ▶ Repair open in the ground circuit between ECS ECU harness connector and pressure sensor harness connector and then go to "Verification of vehicle repair" procedure.

Component Inspection

1. IG "OFF"
2. IG "ON" & Engine "OFF"
3. After connecting scantool, Check DTC.
4. Using scantool, Clear DTC.
5. Again using scantool, Check DTC present.
6. Is the same DTC shown, agian?

YES ▶ Substitute with a known-good pressure sensor and check for proper operation. If problem is corrected, replace pressure sensor and then go to "Verification of Vehicle Repair" procedure.

NO ▶ This malfuction may temporarily happen by poor connection in the pressure sensor.
Go to "Verification of Vehicle Repair" procedure.

Verification of Vehicle Repair

After a repair, it is essential to verify that the fault has been corrected.

1. Connect scantool and select "Diagnostic Trouble Codes(DTCs)" mode
2. Using a scantool, Clear DTC.
3. Operate the vehicle within DTC Detecting Condition in General Information.
4. Using a scantool, Check DTC present.
5. Are any DTCs present ?

YES ▶ Go to the applicable troubleshooting procedure.

NO ▶ System performing to specification at this time.

C1243 Height Sensor - Front Left

Component Location

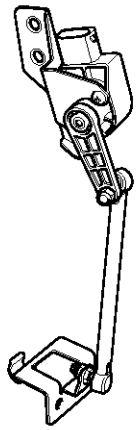

SBHSS8351D

General Description

The ECS is the abbreviation for "Electronic Control Suspension". This ECS system automatically controls the height of a vehicle level and the damping force of shock absorbers according to road condition. So it improves riding comfort and steering stability. Among components of the ECS system, a height sensor is set up between an axle and an chassis body. And this sensor measures the height of an vehicle and gives it to ECS ECU. This height sensor converts the movement of rod into pulses. And ECS ECU receives these pulses and becomes aware of a vehicle's height.

DTC Description

The ECS ECU monitors the PWM output signals of height sensor and if it is out of normal range, this DTC is set.

DTC Detecting Condition

Item		Detecting Condition	Possible cause
DTC Strategy		• Monitoring the PWM signals of height sensor	
Threshold value	Case 1	• When the frequency of the PWM signal is less than 588 Hz or more than 1000 Hz	• Open or short in the front-left height sensor • Faulty front-left height sensor
	Case 2	• When abnormal PWM signal is outputted	
Fail-Safe	Airspring	• In a case of one sensor's failure - Controlling a vehicle height by three sensors • In a case of two or more sensor's failure - Inhibition of a vehicle level control	
	CDC damper	• Stopping the CDC damper's output (0 mA) or Controlling current at certain value (600 mA)	

Diagnostic Circuit Diagram

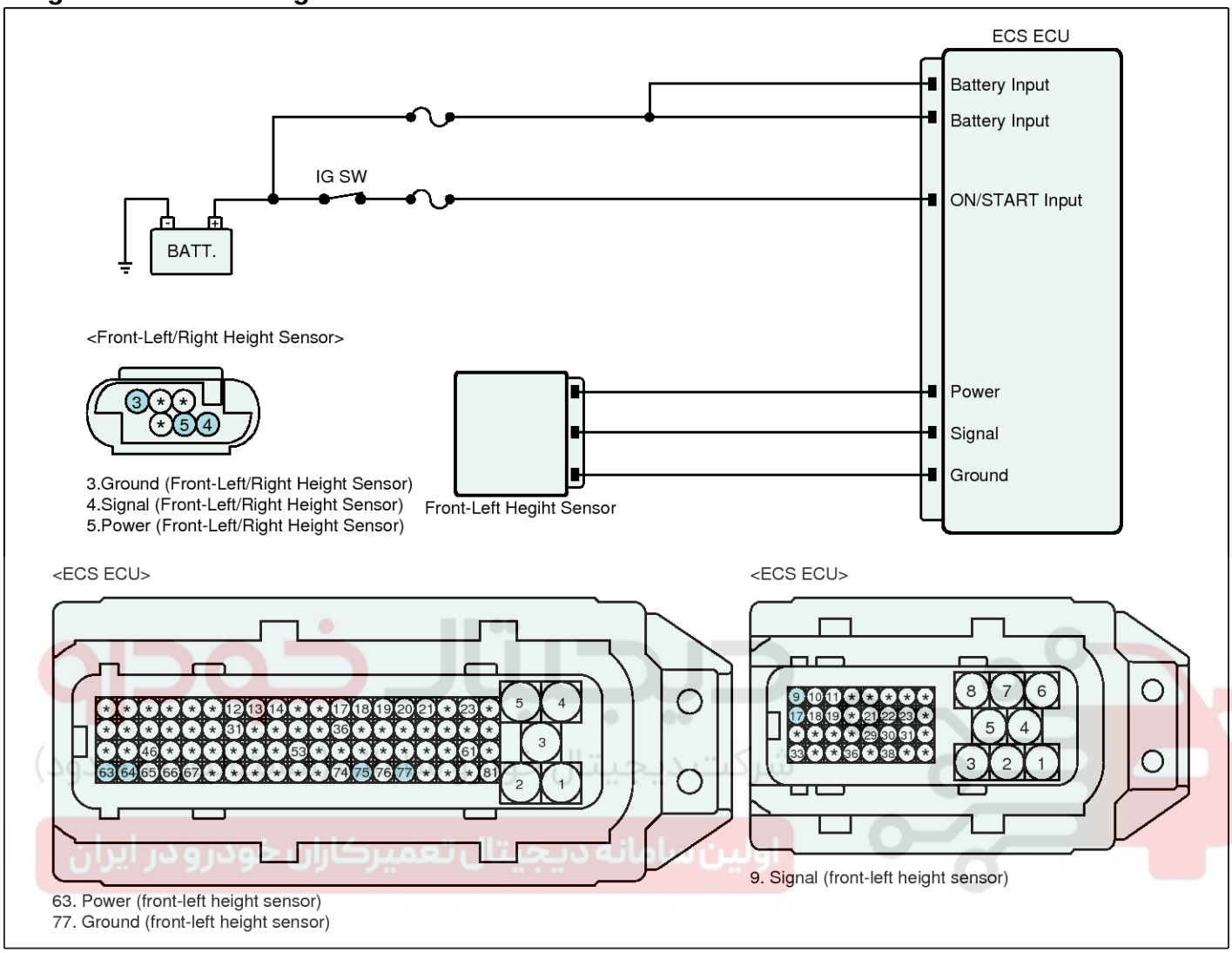

SBHSS9602L

Monitor Scantool Data

1. Locate the vehicle on the even ground.
2. Connect scantool and then start engine.
3. Monitor the service data related to a vehicle level, as changing the height of the vehicle.

Specifications : 1) As the vehicle's height rises, the vehicle level value increases.
2) As the vehicle's height falls, the vehicle level value decreases.

Current Data

Standard Display | Full List | Graph | Items List | Reset Min.Max. | Record | Stop | VSS

Sensor Name	Value	Unit
☑ Absolute Height Level - Front Left	143	-
☑ Absolute Height Level - Front Right	160	-
☑ Absolute Height Level - Rear Left	176	-
☑ Absolute Height Level - Rear Right	175	-

Fig.1

SBHSS9501L

Current Data

Standard Display | Full List | Graph | Items List | Reset Min.Max. | Record | Stop | VSS

Sensor Name	Value	Unit
☑ Absolute Height Level - Front Left	157	-
☑ Absolute Height Level - Front Right	177	-
☑ Absolute Height Level - Rear Left	200	-
☑ Absolute Height Level - Rear Right	201	-

Fig.2

SBHSS9502L

Fig 1) Sample data at pressing the height switch at Normal level

Fig 2) Sample data at pressing the height switch at High level

4. Is the service data related to vehicle level normal?

YES ▶ Fault is intermittent caused by poor connection in ECS ECU's connector or was repaired and ECS ECU memory was not cleared. Thoroughly check connectors for looseness, poor connection, bending, corrosion, contamination, deterioration, or damage.
▶ Repair or replace as necessary and then go to "Verification of Vehicle Repair" procedure.

NO ▶ Go to "Terminal and Connector Inspection" procedure.

Terminal and Connector Inspection

1. Many malfunctions in the electrical system are caused by poor harness(es) and terminal condition.
   Faults can also be caused by interference from other electrical systems, and mechanical or chemical damage.
2. Thoroughly check connectors for looseness, poor connection, bending, corrosion, contamination, deterioration, or damage.
3. Has a problem been found?

YES ▶ Repair as necessary and then go to "Verification of Vehicle Repair" procedure.

NO ▶ Go to "Power Circuit Inspection" procedure.

Power Circuit Inspection

■ Check for open

1. IG "ON"
2. Disconnect front-left height sensor connector.
3. Measure voltage between power terminal of front-left height sensor harness connector and chassis ground.

Specification : Approx. 5V

4. Is the measured value within specifications?

YES ▶ Go to "Signal Circuit Inspection" procedure.

NO ▶ Repair open in the power circuit between E-CS ECU and height sensor harness connector and then go to "Verification of Vehicle Repair" procedure.

Signal Circuit Inspection

■ Check for short

1. IG "OFF"
2. Disconnect front-left height sensor connector and ECS ECU connector.
3. Measure resistance between power terminal and signal terminal of front-left height sensor harness connector.
4. Measure resistance between ground terminal and signal terminal of front-left height sensor harness connector.

Specification : Infinite

5. Is the measured value within specifications?

YES ▶ Go to "Check for open" procedure.

NO ▶ Repair short in the signal circuit between E-CS ECU harness connector and height sensor harness connector and then go to "Verification of Vehicle Repair" procedure.

■ Check for open

1. IG "OFF"
2. Disconnect front-left height sensor connector and ECS ECU connector.
3. Measure resistance between signal terminal of front-left height sensor harness connector and signal terminal of ECS ECU harness connector.

Specification : Below approx. 1Ω

4. Is the measured value within specifications?

YES ▶ Go to "Ground Circuit Inspection" procedure.

NO ▶ Repair open in the signal circuit between E-CS ECU harness connector and height sensor harness connector and then go to "Verification of Vehicle Repair" procedure.

Ground Circuit Inspection

■ Check for open

1. IG "OFF"
2. Disconnect front-left height sensor connector and ECS ECU connector.
3. Measure resistance between ground terminal of front-left height sensor harness connector and ground terminal of ECS ECU harness connector.

Specification : Below approx. 1Ω

4. Is the measured value within specifications?

YES ▶ Go to "Component Inspection" procedure.

NO ▶ Repair open in the ground circuit between E-CS ECU harness connector and height sensor harness connector and then go to "Verification of Vehicle Repair" procedure.

Component Inspection

■ Check height sensor

1. IG "OFF"
2. After connecting scantool, IG "ON" and then check DTC.
3. Using scantool, Clear DTC.
4. Start engine.
5. Press the height control switch for a vehicle level change
6. Again using scantool, Check DTC present.
7. Is the same DTC shown, agian?

YES ▶ Substitute with a known-good height sensor and check for proper operation. If problem is corrected, replace height sensor and then go to "Verification of Vehicle Repair" procedure.
※ In a case of replacing a height sensor, operate the height sensor's calibration by scantool.

NO ▶ This malfuction may temporarily happen by poor connection in the height sensor.
Go to "Verification of Vehicle Repair" procedure.

Verification of Vehicle Repair

After a repair, it is essential to verify that the fault has been corrected.

1. Connect scantool and select "Diagnostic Trouble Codes(DTCs)" mode
2. Using a scantool, Clear DTC.
3. Operate the vehicle within DTC Detecting Condition in General Information.
4. Using a scantool, Check DTC present.
5. Are any DTCs present ?

YES ▶ Go to the applicable troubleshooting procedure.

NO ▶ System performing to specification at this time.

C1246 Height Sensor Supply Voltage Failure - LH

Component Location

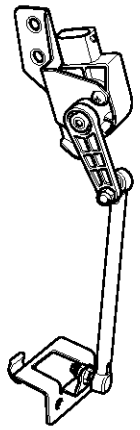

SBHSS8351D

General Description

The ECS is the abbreviation for "Electronic Control Suspension". This ECS system automatically controls the height of a vehicle level and the damping force of shock absorbers according to road condition. So it improves riding comfort and steering stability. Among components of the ECS system, a height sensor is set up between an axle and an chassis body. And this sensor measures the height of an vehicle and gives it to ECS ECU. This height sensor converts the movement of rod into pulses. And ECS ECU receives these pulses and becomes aware of a vehicle's height.

DTC Detecting Condition

The ECS ECU monitors the state of power supply to left height sensor and if it is out of normal range, this DTC is set.

DTC Detecting Condition

Item		Detecting Condition	Possible cause
DTC Strategy		• Monitoring a sensor's power supply	
Threshold value	Case 1	• When the sensor power voltage is below 4V	• Open or short in the power circuit of left height sensor • Faulty ECS ECU
	Case 2	• When the sensor power voltage is above 6V	
Fail-Safe	Airspring	• Inhibition of controlling a vehicle level	
	CDC damper	• Controlling current at certain value (600 mA)	

Diagnostic Circuit Diagram

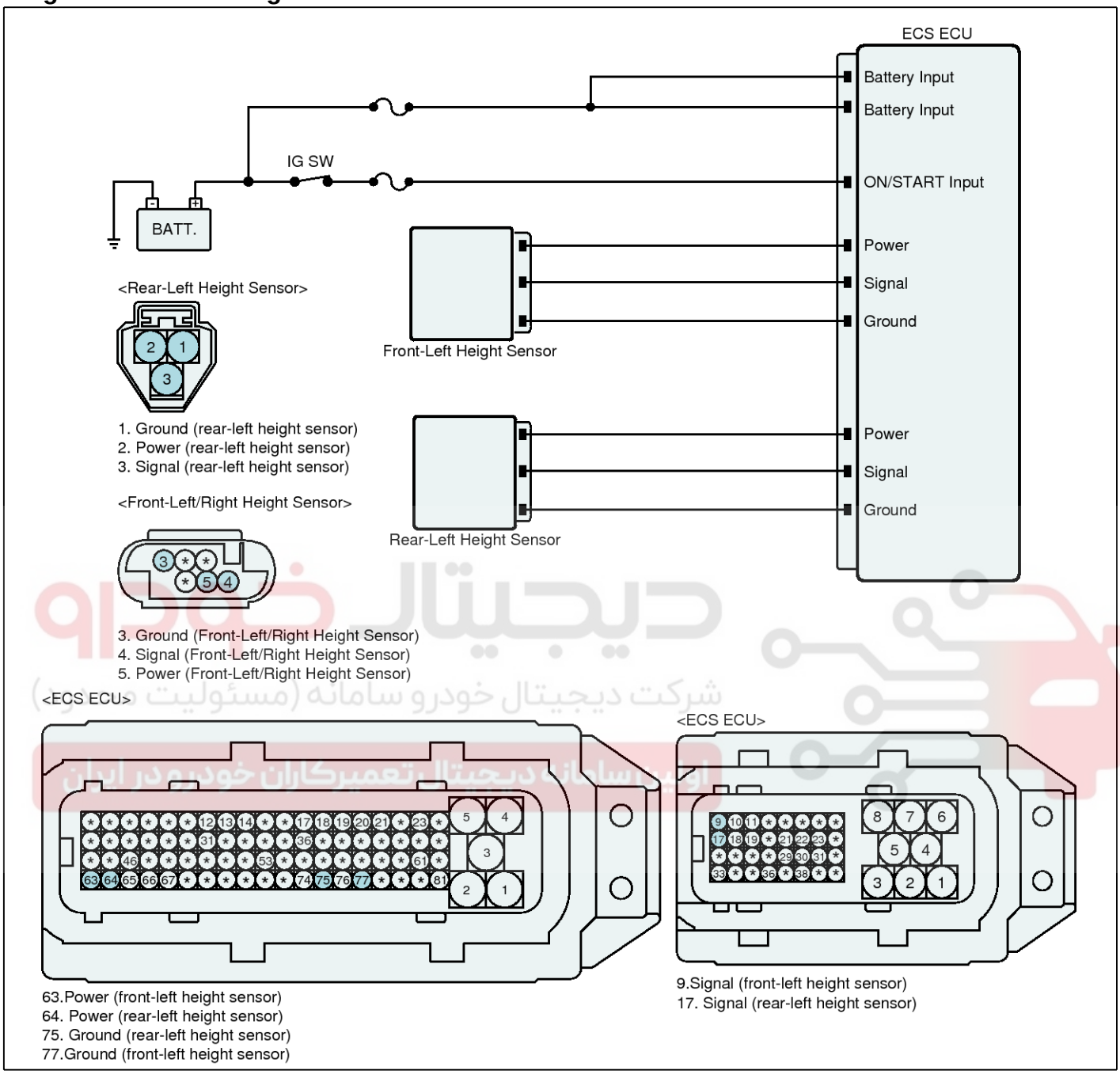

SBHSS9603L

Terminal and Connector Inspection

1. Many malfunctions in the electrical system are caused by poor harness(es) and terminal condition.

   Faults can also be caused by interference from other electrical systems, and mechanical or chemical damage.
2. Thoroughly check connectors for looseness, poor connection, bending, corrosion, contamination, deterioration, or damage.
3. Has a problem been found?

YES ▶ Repair as necessary and then go to "Verification of Vehicle Repair" procedure.

NO ▶ Go to "Power Circuit Inspection" procedure.

Power Circuit Inspection

■ Check for open/short

1. IG "ON"
2. Disconnect left height sensor connector.
3. Measure voltage between power terminal of left height sensor harness connector and chassis ground.

Specification : Approx. 5V

4. Is the measured value within specifications?

YES ▶ Substitute with a known-good ECS ECU and check for proper operation. If problem is corrected, replace ECS ECU and then go to "Verification of Vehicle Repair" procedure.
※ In a case of replacing ECS ECU, operate ECU Variant coding and height sensor's calibration by scantool

NO ▶ Repair open or short in power circuit between ECS ECU and left height sensor, and then go to "Verification of vehicle Repair" procedure.

Verification of Vehicle Repair

After a repair, it is essential to verify that the fault has been corrected.

1. Connect scantool and select "Diagnostic Trouble Codes(DTCs)" mode
2. Using a scantool, Clear DTC.
3. Operate the vehicle within DTC Detecting Condition in General Information.
4. Using a scantool, Check DTC present.
5. Are any DTCs present ?

YES ▶ Go to the applicable troubleshooting procedure.

NO ▶ System performing to specification at this time.

C1247 Height Sensor - Front Right

Component Location

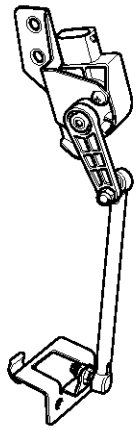

SBHSS8351D

General Description

The ECS is the abbreviation for "Electronic Control Suspension". This ECS system automatically controls the height of a vehicle level and the damping force of shock absorbers according to road condition. So it improves riding comfort and steering stability. Among components of the ECS system, a height sensor is set up between an axle and an chassis body. And this sensor measures the height of an vehicle and gives it to ECS ECU. This height sensor converts the movement of rod into pulses. And ECS ECU receives these pulses and becomes aware of a vehicle's height.

DTC Description

The ECS ECU monitors the PWM output signals of height sensor and if it is out of normal range, this DTC is set.

DTC Detecting Condition

Item		Detecting Condition	Possible cause
DTC Strategy		• Monitoring the PWM signals of height sensor	
Threshold value	Case 1	• When the frequency of the PWM signal is less than 588 Hz or more than 1000 Hz	• Open or short in the front-right height sensor • Faulty front-right height sensor
	Case 2	• When abnormal PWM signal is outputted	
Fail-Safe	Airspring	• In a case of one sensor's failure - Controlling a vehicle height by three sensors • In a case of two or more sensor's failure - Inhibition of a vehicle level control	
	CDC damper	• Stopping the CDC damper's output (0 mA) or Controlling current at certain value (600 mA)	

Diagnostic Circuit Diagram

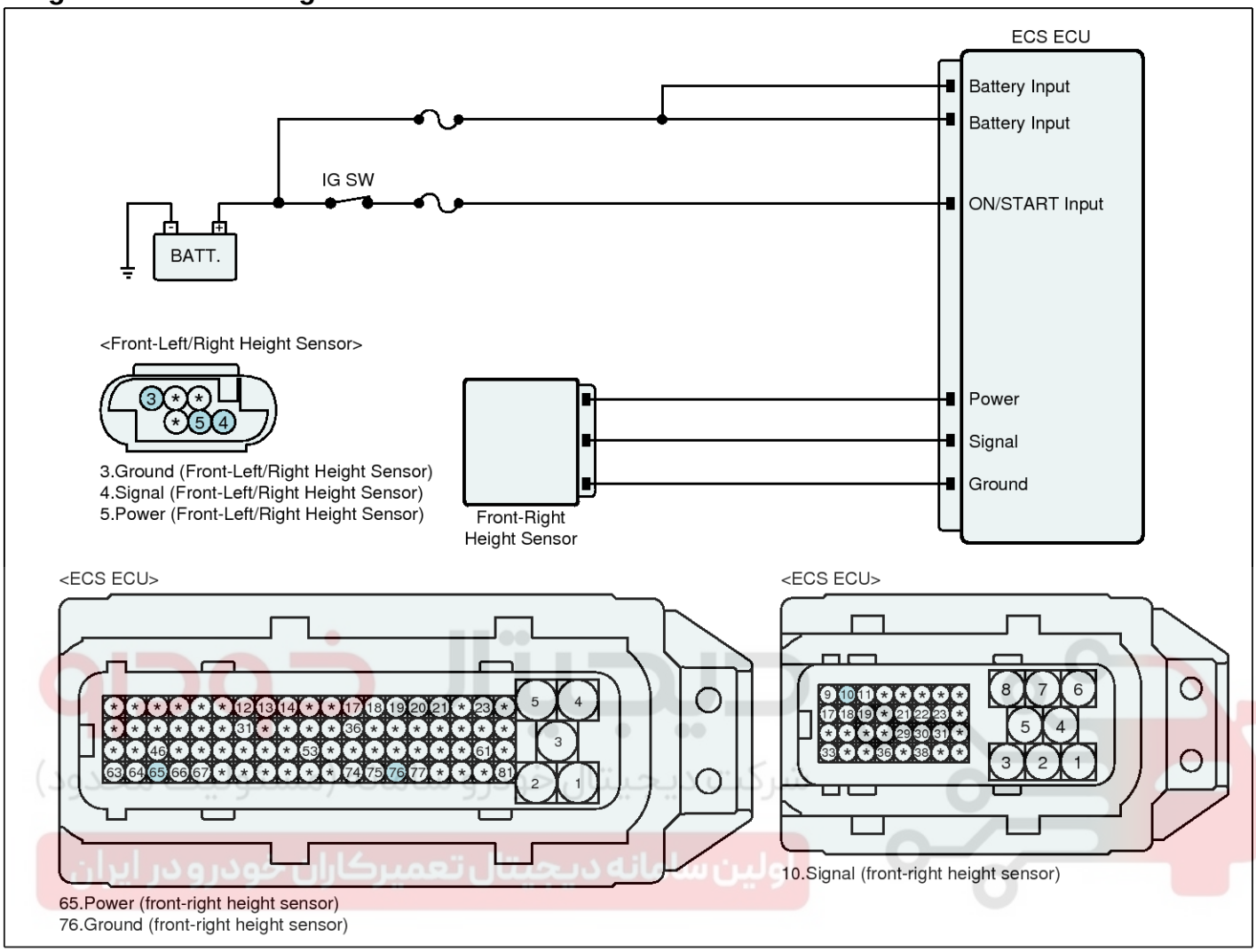

SBHSS9604L

Monitor Scantool Data

1. Locate the vehicle on the even ground.
2. Connect scantool and then start engine.
3. Monitor the service data related to a vehicle level, as changing the height of the vehicle.

Specifications : 1) As the vehicle's height rises, the vehicle level value increases.
2) As the vehicle's height falls, the vehicle level value decreases.

Current Data

Standard Display | Full List | Graph | Items List | Reset Min.Max. | Record | Stop | VSS

Sensor Name	Value	Unit
☑ Absolute Height Level - Front Left	143	-
☑ Absolute Height Level - Front Right	160	-
☑ Absolute Height Level - Rear Left	176	-
☑ Absolute Height Level - Rear Right	175	-

Fig.1

SBHSS9501L

Current Data

Standard Display | Full List | Graph | Items List | Reset Min.Max. | Record | Stop | VSS

Sensor Name	Value	Unit
☑ Absolute Height Level - Front Left	157	-
☑ Absolute Height Level - Front Right	177	-
☑ Absolute Height Level - Rear Left	200	-
☑ Absolute Height Level - Rear Right	201	-

Fig.2

SBHSS9502L

Fig 1) Sample data at pressing the height switch at Normal level

Fig 2) Sample data at pressing the height switch at High level

4. Is the service data related to vehicle level normal?

YES ▶ Fault is intermittent caused by poor connection in ECS ECU's connector or was repaired and ECS ECU memory was not cleared. Thoroughly check connectors for looseness, poor connection, bending, corrosion, contamination, deterioration, or damage.
▶ Repair or replace as necessary and then go to "Verification of Vehicle Repair" procedure.

NO ▶ Go to "Terminal and Connector Inspection" procedure.

Terminal and Connector Inspection

1. Many malfunctions in the electrical system are caused by poor harness(es) and terminal condition.
   Faults can also be caused by interference from other electrical systems, and mechanical or chemical damage.
2. Thoroughly check connectors for looseness, poor connection, bending, corrosion, contamination, deterioration, or damage.
3. Has a problem been found?

YES ▶ Repair as necessary and then go to "Verification of Vehicle Repair" procedure.

NO ▶ Go to "Power Circuit Inspection" procedure.

Power Circuit Inspection

■ Check for open

1. IG "ON"
2. Disconnect front-right height sensor connector.
3. Measure voltage between power terminal of front-right height sensor harness connector and chassis ground.

Specification : Approx. 5V

4. Is the measured value within specifications?

YES ▶ Go to "Signal Circuit Inspection" procedure.

NO ▶ Repair open in the power circuit between E-CS ECU and height sensor harness connector and then go to "Verification of Vehicle Repair" procedure.

Signal Circuit Inspection

■ Check for short

1. IG "OFF"
2. Disconnect front-right height sensor connector and ECS ECU connector.
3. Measure resistance between power terminal and signal terminal of front-right height sensor harness connector.
4. Measure resistance between ground terminal and signal terminal of front-right height sensor harness connector.

Specification : Infinite

5. Is the measured value within specifications?

YES ▶ Go to "Check for open" procedure.

NO ▶ Repair short in the signal circuit between E-CS ECU harness connector and height sensor harness connector and then go to "Verification of Vehicle Repair" procedure.

■ Check for open

1. IG "OFF"
2. Disconnect front-right height sensor connector and ECS ECU connector.
3. Measure resistance between signal terminal of front-right height sensor harness connector and signal terminal of ECS ECU harness connector.

Specification : Below approx. 1Ω

4. Is the measured value within specifications?

YES ▶ Go to "Ground Circuit Inspection" procedure.

NO ▶ Repair open in the signal circuit between E-CS ECU harness connector and height sensor harness connector and then go to "Verification of Vehicle Repair" procedure.

Ground Circuit Inspection

■ Check for open

1. IG "OFF"
2. Disconnect front-right height sensor connector and ECS ECU connector.
3. Measure resistance between ground terminal of front-right height sensor harness connector and ground terminal of ECS ECU harness connector.

Specification : Below approx. 1Ω

4. Is the measured value within specifications?

YES ▶ Go to "Component Inspection" procedure.

NO ▶ Repair open in the ground circuit between E-CS ECU harness connector and height sensor harness connector and then go to "Verification of Vehicle Repair" procedure.

Component Inspection

1. IG "OFF"
2. After connecting scantool, IG "ON" and then check DTC.
3. Using scantool, Clear DTC.
4. Start engine.
5. Press the height control switch for a vehicle level change
6. Again using scantool, Check DTC present.
7. Is the same DTC shown, agian?

YES ▶ Substitute with a known-good height sensor and check for proper operation. If problem is corrected, replace height sensor and then go to "Verification of Vehicle Repair" procedure.
※ In a case of replacing a height sensor, operate the height sensor's calibration by scantool.

NO ▶ This malfuction may temporarily happen by poor connection in the height sensor.
Go to "Verification of Vehicle Repair" procedure.

Verification of Vehicle Repair

After a repair, it is essential to verify that the fault has been corrected.

1. Connect scantool and select "Diagnostic Trouble Codes(DTCs)" mode
2. Using a scantool, Clear DTC.
3. Operate the vehicle within DTC Detecting Condition in General Information.
4. Using a scantool, Check DTC present.
5. Are any DTCs present ?

YES ▶ Go to the applicable troubleshooting procedure.

NO ▶ System performing to specification at this time.

C1250 Height Sensor Supply Voltage Failure - RH

Component Location

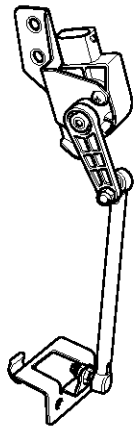

SBHSS8351D

General Description

The ECS is the abbreviation for "Electronic Control Suspension". This ECS system automatically controls the height of a vehicle level and the damping force of shock absorbers according to road condition. So it improves riding comfort and steering stability. Among components of the ECS system, a height sensor is set up between an axle and an chassis body. And this sensor measures the height of an vehicle and gives it to ECS ECU. This height sensor converts the movement of rod into pulses. And ECS ECU receives these pulses and becomes aware of a vehicle's height.

DTC Description

The ECS ECU monitors the state of power supply to right height sensor and if it is out of normal range, this DTC is set.

DTC Detecting Condition

Item		Detecting Condition	Possible cause
DTC Strategy		• Monitoring a sensor's power supply	
Threshold value	Case 1	• When the sensor power voltage is below 4V	• Open or short in the power circuit of right height sensor/ pressure sensor • Faulty ECS ECU
	Case 2	• When the sensor power voltage is above 6V	
Fail-Safe	Airspring	• Inhibition of controlling a vehicle level	
	CDC damper	• Controlling current at certain value (600 mA)	

Diagnostic Circuit Diagram

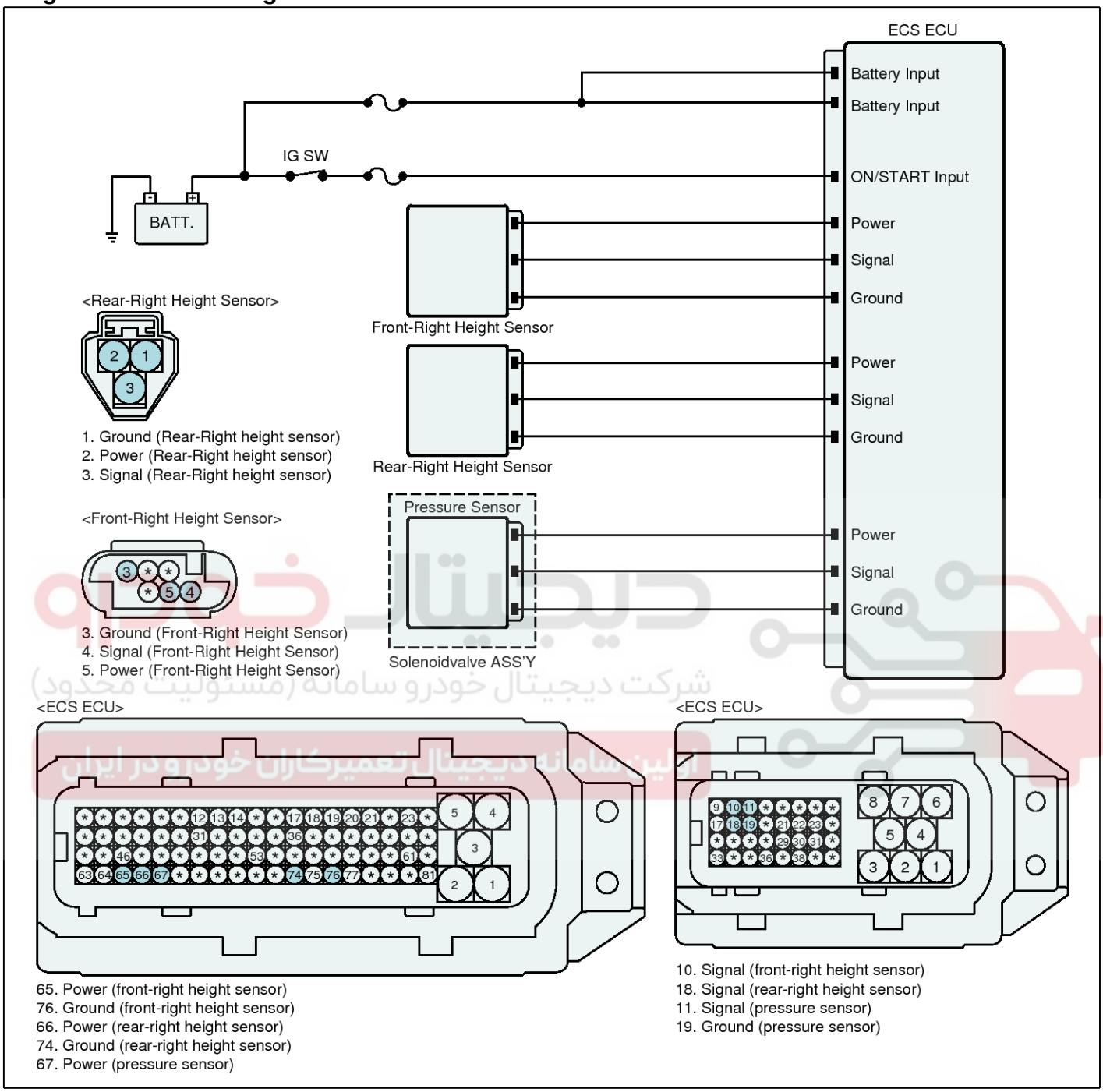

SBHSS9605L

Terminal and Connector Inspection

1. Many malfunctions in the electrical system are caused by poor harness(es) and terminal condition.

   Faults can also be caused by interference from other electrical systems, and mechanical or chemical damage.
2. Thoroughly check connectors for looseness, poor connection, bending, corrosion, contamination, deterioration, or damage.
3. Has a problem been found?

YES ▶ Repair as necessary and then go to "Verification of Vehicle Repair" procedure.

NO ▶ Go to "Power Circuit Inspection" procedure.

Power Circuit Inspection

■ Check for open/short

1. IG "ON"
2. Disconnect right height sensor connector and pressure sensor connector.
3. Measure voltage between power terminal of right height sensor harness connector and chassis ground.
4. Measure voltage between power terminal of pressure sensor harness connector and chassis ground.

Specification : Approx. 5V

5. Is the measured value within specifications?

YES ▶ Substitute with a known-good ECS ECU and check for proper operation. If problem is corrected, replace ECS ECU and then go to "Verification of Vehicle Repair" procedure.
※ In a case of replacing ECS ECU, operate ECU Variant coding and height sensor's calibration by scantool

NO ▶ Repair open or short in power circuit between ECS ECU and right height sensor/ pressure sensor and then go to "Verification of vehicle Repair" procedure.

Verification of Vehicle Repair

After a repair, it is essential to verify that the fault has been corrected.

1. Connect scantool and select "Diagnostic Trouble Codes(DTCs)" mode
2. Using a scantool, Clear DTC.
3. Operate the vehicle within DTC Detecting Condition in General Information.
4. Using a scantool, Check DTC present.
5. Are any DTCs present ?

YES ▶ Go to the applicable troubleshooting procedure.

NO ▶ System performing to specification at this time.

C1251 Height Sensor - Rear Left

Component Location

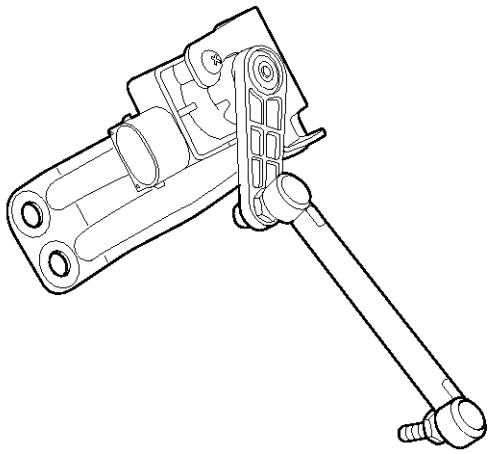

SBHSS8352D

General Description

The ECS is the abbreviation for "Electronic Control Suspension". This ECS system automatically controls the height of a vehicle level and the damping force of shock absorbers according to road condition. So it improves riding comfort and steering stability. Among components of the ECS system, a height sensor is set up between an axle and an chassis body. And this sensor measures the height of an vehicle and gives it to ECS ECU. This height sensor converts the movement of rod into pulses. And ECS ECU receives these pulses and becomes aware of a vehicle's height.

DTC Description

The ECS ECU monitors the PWM output signals of height sensor and if it is out of normal range, this DTC is set.

DTC Detecting Condition

Item		Detecting Condition	Possible cause
DTC Strategy		• Monitoring the PWM signals of height sensor	
Threshold value	Case 1	• When the frequency of the PWM signal is less than 588 Hz or more than 1000 Hz	• Open or short in the rear-left height sensor • Faulty rear-left height sensor
	Case 2	• When abnormal PWM signal is outputted	
Fail-Safe	Airspring	• In a case of one sensor's failure - Controlling a vehicle height by three sensors • In a case of two or more sensor's failure - Inhibition of a vehicle level control	
	CDC damper	• Stopping the CDC damper's output (0 mA) or Controlling current at certain value (600 mA)	

Diagnostic Circuit Diagram

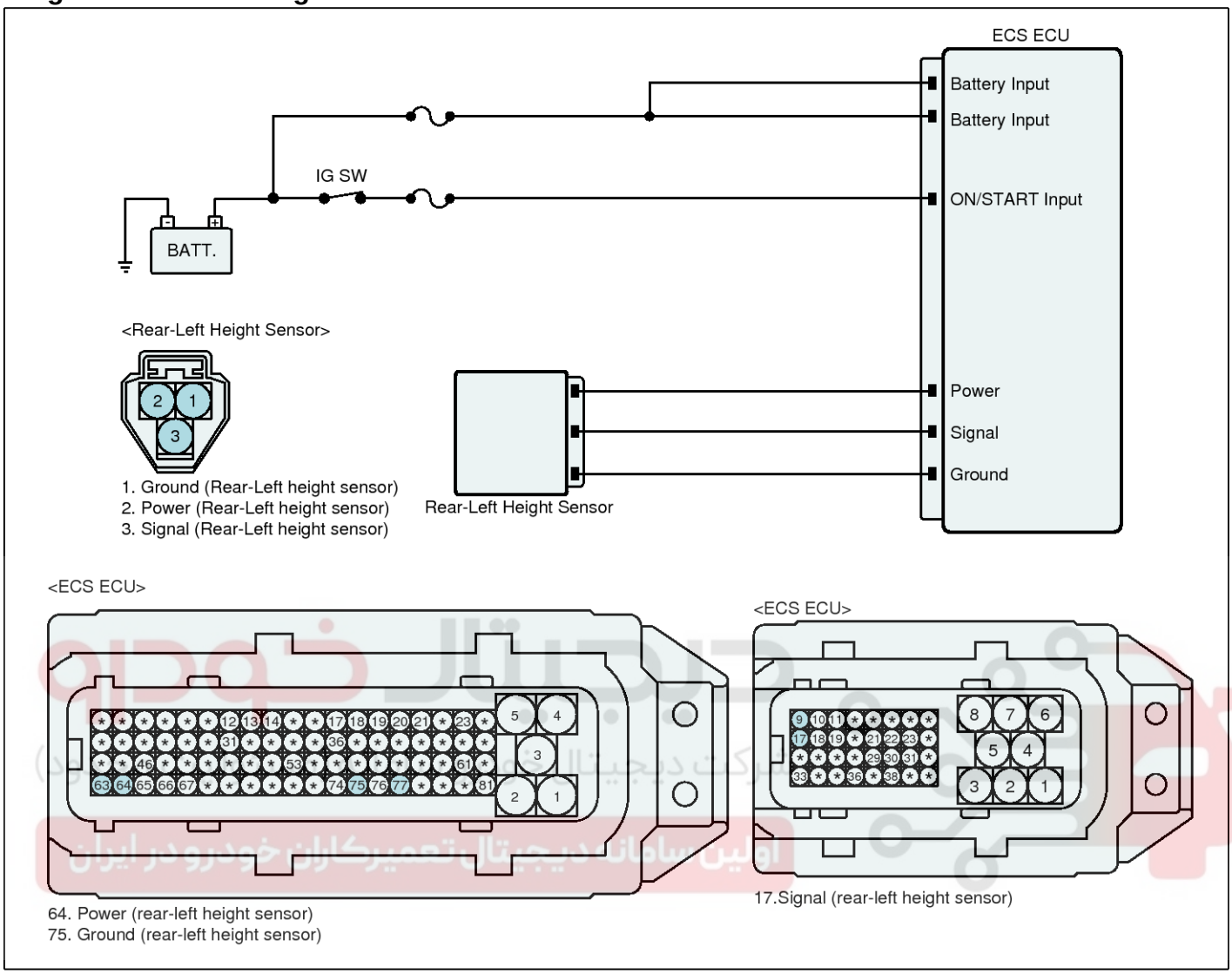

SBHSS9606L

Monitor Scantool Data

1. Locate the vehicle on the even ground.
2. Connect scantool and then start engine.
3. Monitor the service data related to a vehicle level, as changing the height of the vehicle.

Specifications : 1) As the vehicle's height rises, the vehicle level value increases.
2) As the vehicle's height falls, the vehicle level value decreases.

Current Data

Standard Display | Full List | Graph | Items List | Reset Min.Max. | Record | Stop | VSS

Sensor Name	Value	Unit
Absolute Height Level - Front Left	143	-
Absolute Height Level - Front Right	160	-
Absolute Height Level - Rear Left	176	-
Absolute Height Level - Rear Right	175	-

Fig.1

SBHSS9501L

Current Data

Standard Display | Full List | Graph | Items List | Reset Min.Max. | Record | Stop | VSS

Sensor Name	Value	Unit
Absolute Height Level - Front Left	157	-
Absolute Height Level - Front Right	177	-
Absolute Height Level - Rear Left	200	-
Absolute Height Level - Rear Right	201	-

Fig.2

SBHSS9502L

Fig 1) Sample data at pressing the height switch at Normal level

Fig 2) Sample data at pressing the height switch at High level

4. Is the service data related to vehicle level normal?

YES ▶ Fault is intermittent caused by poor connection in ECS ECU's connector or was repaired and ECS ECU memory was not cleared. Thoroughly check connectors for looseness, poor connection, bending, corrosion, contamination, deterioration, or damage.
▶ Repair or replace as necessary and then go to "Verification of Vehicle Repair" procedure.

NO ▶ Go to "Terminal and Connector Inspection" procedure.

Terminal and Connector Inspection

1. Many malfunctions in the electrical system are caused by poor harness(es) and terminal condition.
   Faults can also be caused by interference from other electrical systems, and mechanical or chemical damage.
2. Thoroughly check connectors for looseness, poor connection, bending, corrosion, contamination, deterioration, or damage.
3. Has a problem been found?

YES ▶ Repair as necessary and then go to "Verification of Vehicle Repair" procedure.

NO ▶ Go to "Power Circuit Inspection" procedure.

Power Circuit Inspection

■ Check for open

1. IG "ON"
2. Disconnect rear-left height sensor connector.
3. Measure voltage between power terminal of rear-left height sensor harness connector and chassis ground.

Specification : Approx. 5V

4. Is the measured value within specifications?

YES ▶ Go to "Signal Circuit Inspection" procedure.

NO ▶ Repair open in the power circuit between E-CS ECU and height sensor harness connector and then go to "Verification of Vehicle Repair" procedure.

Signal Circuit Inspection

■ Check for short

1. IG "OFF"
2. Disconnect rear-left height sensor connector and ECS ECU connector.
3. Measure resistance between power terminal and signal terminal of rear-left height sensor harness connector.
4. Measure resistance between ground terminal and signal terminal of rear-left height sensor harness connector.

Specification : Infinite

5. Is the measured value within specifications?

YES ▶ Go to "Check for open" procedure.

NO ▶ Repair short in the signal circuit between E-CS ECU harness connector and height sensor harness connector and then go to "Verification of Vehicle Repair" procedure.

■ Check for open

1. IG "OFF"
2. Disconnect rear-left height sensor connector and ECS ECU connector.
3. Measure resistance between signal terminal of rear-left height sensor harness connector and signal terminal of ECS ECU harness connector.

Specification : Below approx. 1Ω

4. Is the measured value within specifications?

YES ▶ Go to "Ground Circuit Inspection" procedure.

NO ▶ Repair open in the signal circuit between E-CS ECU harness connector and height sensor harness connector and then go to "Verification of Vehicle Repair" procedure.

Ground Circuit Inspection

■ Check for open

1. IG "OFF"
2. Disconnect rear-left height sensor connector and ECS ECU connector.
3. Measure resistance between ground terminal of rear-left height sensor harness connector and ground terminal of ECS ECU harness connector.

Specification : Below approx. 1Ω

4. Is the measured value within specifications?

YES ▶ Go to "Component Inspection" procedure.

NO ▶ Repair open in the ground circuit between E-CS ECU harness connector and height sensor harness connector and then go to "Verification of Vehicle Repair" procedure.

Component Inspection

■ Check height sensor

1. IG "OFF"
2. After connecting scantool, IG "ON" and then check DTC.
3. Using scantool, Clear DTC.
4. Start engine.
5. Press the height control switch for a vehicle level change
6. Again using scantool, Check DTC present.
7. Is the same DTC shown, agian?

YES ▶ Substitute with a known-good height sensor and check for proper operation. If problem is corrected, replace height sensor and then go to "Verification of Vehicle Repair" procedure.
※ In a case of replacing a height sensor, operate the height sensor's calibration by scantool.

NO ▶ This malfuction may temporarily happen by poor connection in the height sensor.
Go to "Verification of Vehicle Repair" procedure.

Verification of Vehicle Repair

After a repair, it is essential to verify that the fault has been corrected.

1. Connect scantool and select "Diagnostic Trouble Codes(DTCs)" mode
2. Using a scantool, Clear DTC.
3. Operate the vehicle within DTC Detecting Condition in General Information.
4. Using a scantool, Check DTC present.
5. Are any DTCs present ?

YES ▶ Go to the applicable troubleshooting procedure.

NO ▶ System performing to specification at this time.

C1255 Height Sensor - Rear Right

Component Location

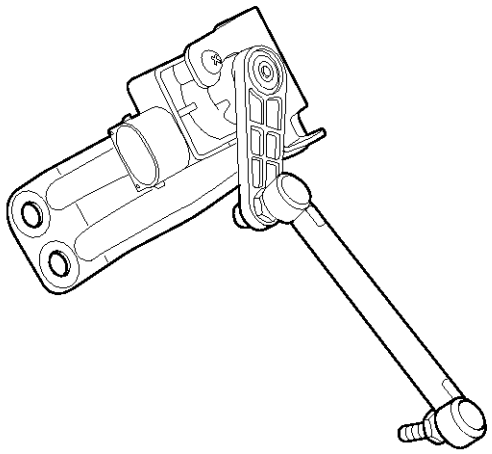

SBHSS8352D

General Description

The ECS is the abbreviation for "Electronic Control Suspension". This ECS system automatically controls the height of a vehicle level and the damping force of shock absorbers according to road condition. So it improves riding comfort and steering stability. Among components of the ECS system, a height sensor is set up between an axle and an chassis body. And this sensor measures the height of an vehicle and gives it to ECS ECU. This height sensor converts the movement of rod into pulses. And ECS ECU receives these pulses and becomes aware of a vehicle's height.

DTC Description

The ECS ECU monitors the PWM output signals of height sensor and if it is out of normal range, this DTC is set.

DTC Detecting Condition

Item		Detecting Condition	Possible cause
DTC Strategy		• Monitoring the PWM signals of height sensor	
Threshold value	Case 1	• When the frequency of the PWM signal is less than 588 Hz or more than 1000 Hz	• Open or short in the rear-right height sensor • Faulty rear-right height sensor
	Case 2	• When abnormal PWM signal is outputted	
Fail-Safe	Airspring	• In a case of one sensor's failure - Controlling a vehicle height by three sensors • In a case of two or more sensor's failure - Inhibition of a vehicle level control	
	CDC damper	• Stopping the CDC damper's output (0 mA) or Controlling current at certain value (600 mA)	

Diagnostic Circuit Diagram

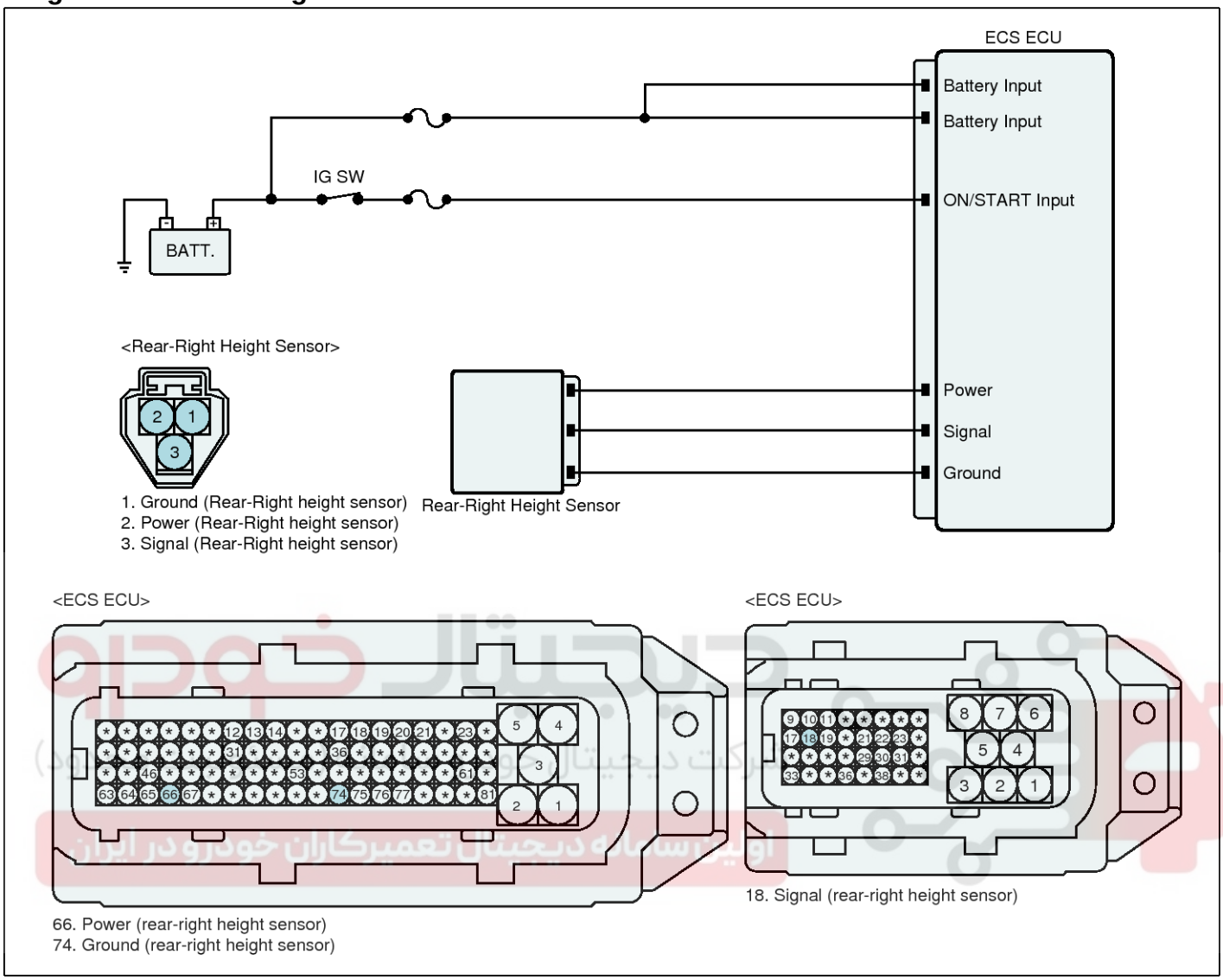

SBHSS9607L

Monitor Scantool Data

1. Locate the vehicle on the even ground.
2. Connect scantool and then start engine.
3. Monitor the service data related to a vehicle level, as changing the height of the vehicle.

Specifications : 1) As the vehicle's height rises, the vehicle level value increases.
2) As the vehicle's height falls, the vehicle level value decreases.

Current Data

Standard Display | Full List | Graph | Items List | Reset Min.Max. | Record | Stop | VSS

Sensor Name	Value	Unit
Absolute Height Level - Front Left	143	-
Absolute Height Level - Front Right	160	-
Absolute Height Level - Rear Left	176	-
Absolute Height Level - Rear Right	175	-

Fig.1

SBHSS9501L

Current Data

Standard Display | Full List | Graph | Items List | Reset Min.Max. | Record | Stop | VSS

Sensor Name	Value	Unit
Absolute Height Level - Front Left	157	-
Absolute Height Level - Front Right	177	-
Absolute Height Level - Rear Left	200	-
Absolute Height Level - Rear Right	201	-

Fig.2

SBHSS9502L

Fig 1) Sample data at pressing the height switch at Normal level

Fig 2) Sample data at pressing the height switch at High level

4. Is the service data related to vehicle level normal?

YES ▶ Fault is intermittent caused by poor connection in ECS ECU's connector or was repaired and ECS ECU memory was not cleared. Thoroughly check connectors for looseness, poor connection, bending, corrosion, contamination, deterioration, or damage.
▶ Repair or replace as necessary and then go to "Verification of Vehicle Repair" procedure.

NO ▶ Go to "Terminal and Connector Inspection" procedure.

Terminal and Connector Inspection

1. Many malfunctions in the electrical system are caused by poor harness(es) and terminal condition.
   Faults can also be caused by interference from other electrical systems, and mechanical or chemical damage.
2. Thoroughly check connectors for looseness, poor connection, bending, corrosion, contamination, deterioration, or damage.
3. Has a problem been found?

YES ▶ Repair as necessary and then go to "Verification of Vehicle Repair" procedure.

NO ▶ Go to "Power Circuit Inspection" procedure.

Power Circuit Inspection

■ Check for open

1. IG "ON"
2. Disconnect rear-right height sensor connector.
3. Measure voltage between power terminal of rear-right height sensor harness connector and chassis ground.

Specification : Approx. 5V

4. Is the measured value within specifications?

YES ▶ Go to "Signal Circuit Inspection" procedure.

NO ▶ Repair open in the power circuit between E-CS ECU and height sensor harness connector and then go to "Verification of Vehicle Repair" procedure.

Signal Circuit Inspection

■ Check for short

1. IG "OFF"
2. Disconnect rear-right height sensor connector and ECS ECU connector.
3. Measure resistance between power terminal and signal terminal of rear-right height sensor harness connector.
4. Measure resistance between ground terminal and signal terminal of rear-right height sensor harness connector.

Specification : Infinite

5. Is the measured value within specifications?

YES ▶ Go to "Check for open" procedure.

NO ▶ Repair short in the signal circuit between E-CS ECU harness connector and height sensor harness connector and then go to "Verification of Vehicle Repair" procedure.

■ Check for open

1. IG "OFF"
2. Disconnect rear-right height sensor connector and ECS ECU connector.
3. Measure resistance between signal terminal of rear-right height sensor harness connector and signal terminal of ECS ECU harness connector.

Specification : Below approx. 1Ω

4. Is the measured value within specifications?

YES ▶ Go to "Ground Circuit Inspection" procedure.

NO ▶ Repair open in the signal circuit between E-CS ECU harness connector and height sensor harness connector and then go to "Verification of Vehicle Repair" procedure.

Ground Circuit Inspection

■ Check for open

1. IG "OFF"
2. Disconnect rear-right height sensor connector and ECS ECU connector.
3. Measure resistance between ground terminal of rear-right height sensor harness connector and ground terminal of ECS ECU harness connector.

Specification : Below approx. 1Ω

4. Is the measured value within specifications?

YES ▶ Go to "Component Inspection" procedure.

NO ▶ Repair open in the ground circuit between E-CS ECU harness connector and height sensor harness connector and then go to "Verification of Vehicle Repair" procedure.

Component Inspection

■ Check height sensor

1. IG "OFF"
2. After connecting scantool, IG "ON" and then check DTC.
3. Using scantool, Clear DTC.
4. Start engine.
5. Press the height control switch for a vehicle level change
6. Again using scantool, Check DTC present.
7. Is the same DTC shown, agian?

YES ▶ Substitute with a known-good height sensor and check for proper operation. If problem is corrected, replace height sensor and then go to "Verification of Vehicle Repair" procedure.
※ In a case of replacing a height sensor, operate the height sensor's calibration by scantool.

NO ▶ This malfuction may temporarily happen by poor connection in the height sensor.
Go to "Verification of Vehicle Repair" procedure.

Verification of Vehicle Repair

After a repair, it is essential to verify that the fault has been corrected.

1. Connect scantool and select "Diagnostic Trouble Codes(DTCs)" mode
2. Using a scantool, Clear DTC.
3. Operate the vehicle within DTC Detecting Condition in General Information.
4. Using a scantool, Check DTC present.
5. Are any DTCs present ?

YES ▶ Go to the applicable troubleshooting procedure.

NO ▶ System performing to specification at this time.

C1260 Steering Angle Sensor Circuit-Signal

Component Location

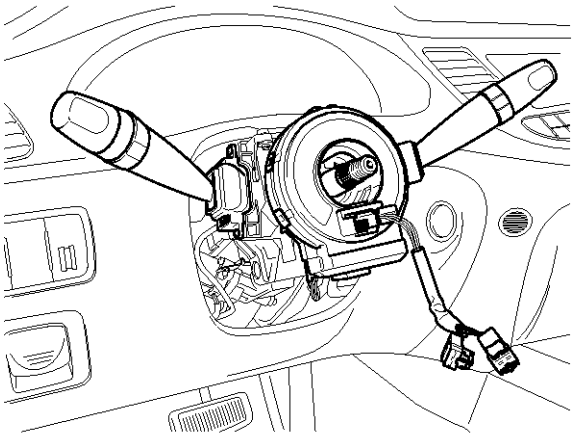

SBHSS8353D

General Description

The ECS is the abbreviation for "Electronic Control Suspension". This ECS system automatically controls the height of a vehicle level and the damping force of shock absorbers according to road condition. So it improves riding comfort and steering stability. The ECS ECU receives the steering signals from steering angle sensor by CAN communication in order to control a damping force of a vehicle.

DTC Description

The ECS ECU monitors CAN signals and if abnormal steering signals are received , this DTC is set.

DTC Detecting Condition

Item		Detecting Condition	Possible cause
DTC Strategy		• Monitoring CAN signals	• Faulty steering angle sensor • An error in CAN communicatio-n circuit
Threshold value		• When abnormal steering messages are received	
Fail-Safe	Airspring	• -	
	CDC damper	• Stopping the CDC damper's output (0 mA)	

Diagnostic Circuit Diagram

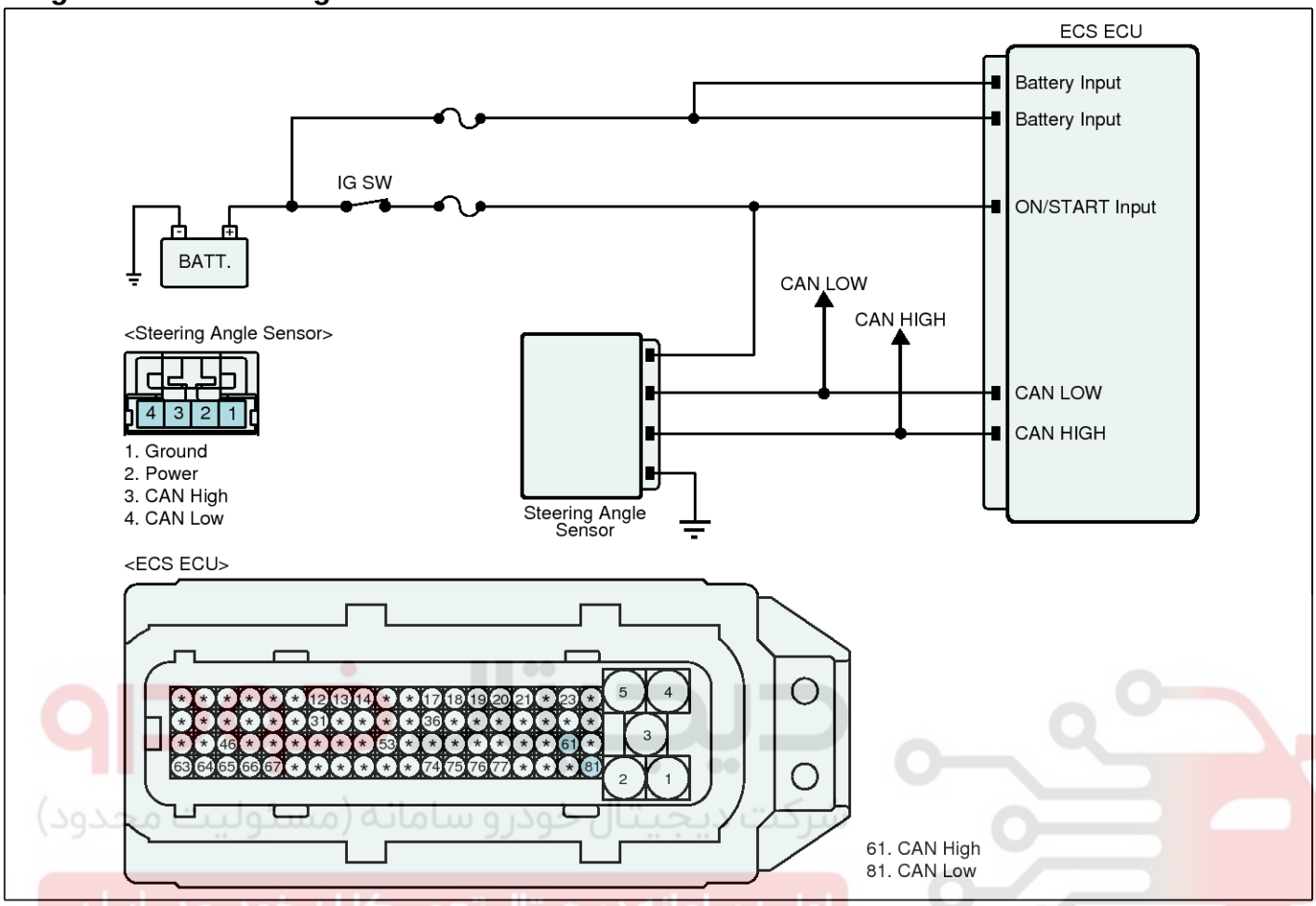

SBHSS9608L

Monitor Scantool Data

1. Connect scantool to Data Link Connector(DLC).
2. IG "ON"
3. Using scantool, Check if DTCs related to the steering angle sensor in the ESP(ESC) system.
4. Is there any DTC related to the steering angle sensor?

YES ▶ This DTC may happen by a fault of the steering angle sensor. First, repair DTCs detected in the ESP(ESC) system and then check if C1260 is regenerated in the ECS system.

NO ▶ Go to "Terminal and Connector Inspection" procedure.

Terminal and Connector Inspection

1. Many malfunctions in the electrical system are caused by poor harness(es) and terminal condition.

   Faults can also be caused by interference from other electrical systems, and mechanical or chemical damage.
2. Thoroughly check connectors for looseness, poor connection, bending, corrosion, contamination, deterioration, or damage.
3. Has a problem been found?

YES ▶ Repair as necessary and then go to "Verification of Vehicle Repair" procedure.

NO ▶ Go to "Signal Circuit Inspection" procedure.

Signal Circuit Inspection

■ Check CAN communication line

1. IG "OFF"
2. Disconnect steering angle sensor connector and ECS ECU connector.
3. Measure resistance between CAN-High terminal of the steering angle sensor harness connector and CAN-High terminal of the ECS ECU harness connector.
4. Measure resistance between CAN-Low terminal of the steering angle sensor harness connector and CAN-Low terminal of the ECS ECU harness connector.

Specification : Below approx. 1Ω

5. Is the measured value within specifications?

YES ▶ Substitute with a known-good steering angle sensor and check for proper operation. If problem is corrected, replace steering angle sensor and then go to "Verification of Vehicle Repair" procedure.
※ In a case of replacing a steering angle sensor, operate the steering angle sensor's calibration by scantool.

NO ▶ Repair open in the CAN communication line between ECS ECU and steering angle sensor and then go to "Verification of Vehicle Repair" procedure.

Verification of Vehicle Repair

After a repair, it is essential to verify that the fault has been corrected.

1. Connect scantool and select "Diagnostic Trouble Codes(DTCs)" mode
2. Using a scantool, Clear DTC.
3. Operate the vehicle within DTC Detecting Condition in General Information.
4. Using a scantool, Check DTC present.
5. Are any DTCs present ?

YES ▶ Go to the applicable troubleshooting procedure.

NO ▶ System performing to specification at this time.

C1278 Acceleration Sensor Front-LH Malfunction

Component Location

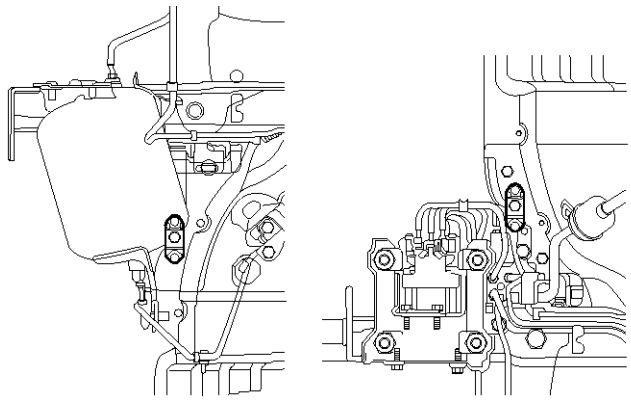

SBHSS8354D

DTC Detecting Condition

Item		Detecting Condition	Possible cause
DTC Strategy		• Monitoring sensor's signals	• Open or short in the front-left acceleration sensor • Faulty front-left acceleration sensor
Threshold value		• The sensor's output voltage is above 4.5V under no other acceleration sensors' fault • The sensor's output voltage is below 0.5V under no other acceleration sensors' fault • When a vehicle is driving on rough road, the output signals of the sensor have a constant value.	
Fail-Safe	Airspring	• -	
	CDC damper	• Controlling current at certain value (600 mA)	

Diagnostic Circuit Diagram

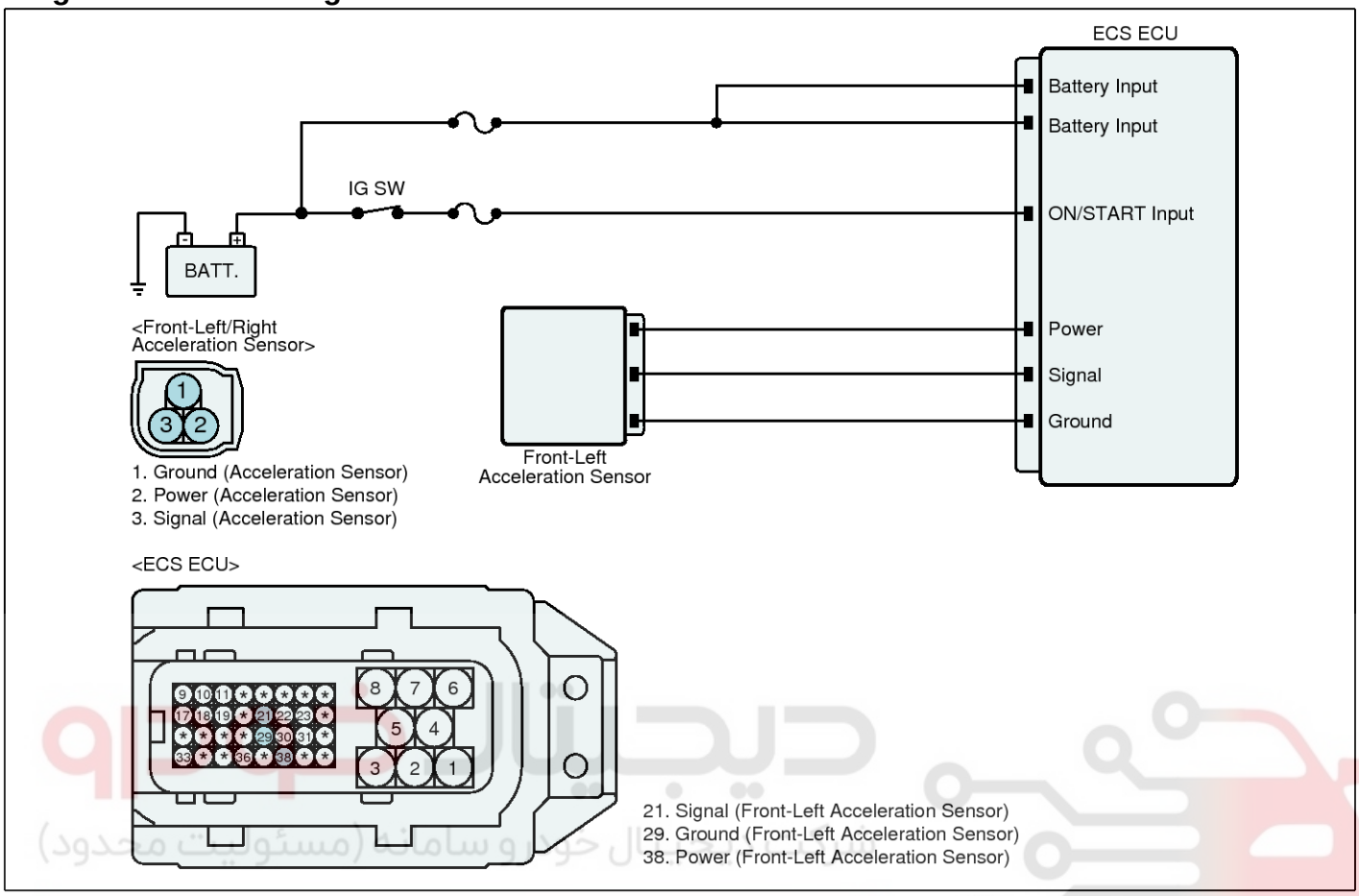

SBHSS9609L

Terminal and Connector Inspection

1. Many malfunctions in the electrical system are caused by poor harness(es) and terminal condition.

   Faults can also be caused by interference from other electrical systems, and mechanical or chemical damage.
2. Thoroughly check connectors for looseness, poor connection, bending, corrosion, contamination, deterioration, or damage.
3. Has a problem been found?

YES ▶ Repair as necessary and then go to "Verification of Vehicle Repair" procedure.

NO ▶ Go to "Power Circuit Inspection" procedure.

Power Circuit Inspection

■ Check for open or short

1. Disconnect front-left acceleration sensor connector.
2. IG "ON"
3. Measure voltage between power terminal of front-left acceleration sensor harness connector and chassis ground.

Specification : Approx. 5V

4. Is the measured value within specifications?

YES ▶ Go to "Ground Circuit Inspection" procedure.

NO ▶ Repair open or short in the power circuit between ECS ECU and acceleration sensor harness connector and then go to "Verification of Vehicle Repair" procedure.

Ground Circuit Inspection

■ Check for open

1. IG "OFF"
2. Disconnect front-left acceleration sensor connector and ECS ECU connector.
3. Measure resistance between ground terminals of front-left acceleration sensor harness connector and chassis ground.

Below approx. 1Ω

4. Is the measured value within specifications?

YES ▶ Go to "Signal Circuit Inspection" procedure.

NO ▶ Repair open in the ground circuit between ECS ECU and acceleration sensor harness connector and then go to "Verification of Vehicle Repair" procedure.

Signal Circuit Inspection

■ Check for short

1. IG "OFF"
2. Disconnect front-left acceleration sensor connector and ECS ECU connector.
3. Measure resistance between power terminal and signal terminal of front-left acceleration sensor harness connector.
4. Measure resistance between ground terminal and signal terminal of front-left acceleration sensor harness connector.

Specification : Infinite

5. Is the measured value within specifications?

YES ▶ Go to "Check for open" procedure.

NO ▶ Repair short in the signal circuit between ECS ECU and acceleration sensor and then go to "Verification of Vehicle Repair" procedure.

■ Check for open

1. IG "OFF"
2. Disconnect front-left acceleration sensor connector and ECS ECU connector.
3. Measure resistance between signal terminal of front-left acceleration sensor harness connector and signal terminal of ECS ECU harness connector.

Specification : Below approx. 1Ω

4. Is the measured value within specifications?

YES ▶ Go to "Component Inspection" procedure.

NO ▶ Repair open in the signal circuit between ECS ECU and acceleration sensor and then go to "Verification of Vehicle Repair" procedure.

Component Inspection

1. IG "OFF"
2. IG "ON" & Engine "OFF"
3. After connecting scantool, Check DTC.
4. Using scantool, Clear DTC.
5. Again using scantool, Check DTC present.
6. Is the same DTC shown, agian?

YES ▶ Substitute with a known-good acceleration sensor and check for proper operation. If problem is corrected, replace acceleration sensor and then go to "Verification of Vehicle Repair" procedure.

NO ▶ This malfuction may temporarily happen by poor connection in the acceleration sensor.
Go to "Verification of Vehicle Repair" procedure.

Verification of Vehicle Repair

After a repair, it is essential to verify that the fault has been corrected.

1. Connect scantool and select "Diagnostic Trouble Codes(DTCs)" mode
2. Using a scantool, Clear DTC.
3. Operate the vehicle within DTC Detecting Condition in General Information.
4. Using a scantool, Check DTC present.
5. Are any DTCs present ?

YES ▶ Go to the applicable troubleshooting procedure.

NO ▶ System performing to specification at this time.

C1279 Acceleration Sensor Front-RH Malfunction

Component Location

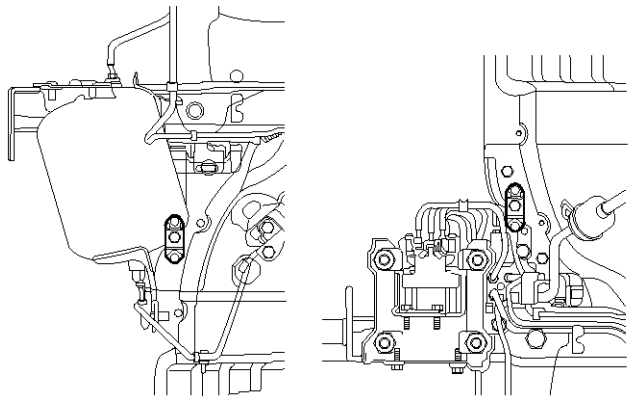

SBHSS8354D

General Description

The ECS is the abbreviation for "Electronic Control Suspension". This ECS system automatically controls the height of a vehicle level and the damping force of shock absorbers according to road condition. So it improves riding comfort and steering stability. Among components of the ECS system, a acceleration sensor is set up to detect the acceleration of a vehicle body. For more detailed measurement, three acceleration sensors are installed on the vehicle. The acceleration signals from these sensors are sent to ECS ECU. And ECS ECU controls the damping force of the vehicle dampers with other sensors' signals.

DTC Description

The ECS ECU monitors signals of front-right acceleration sensor and if abnormal signals are detected, this DTC is set.

DTC Detecting Condition

Item		Detecting Condition	Possible cause
DTC Strategy		• Monitoring sensor's signals	• Open or short in the front-right acceleration sensor • Faulty front-right acceleration sensor
Threshold value		• The sensor's output voltage is above 4.5V under no other acceleration sensors' fault • The sensor's output voltage is below 0.5V under no other acceleration sensors' fault • When a vehicle is driving on rough road, the output signals of the sensor have a constant value.	
Fail-Safe	Airspring	• -	
	CDC damper	• Controlling current at certain value (600 mA)	

Diagnostic Circuit Diagram

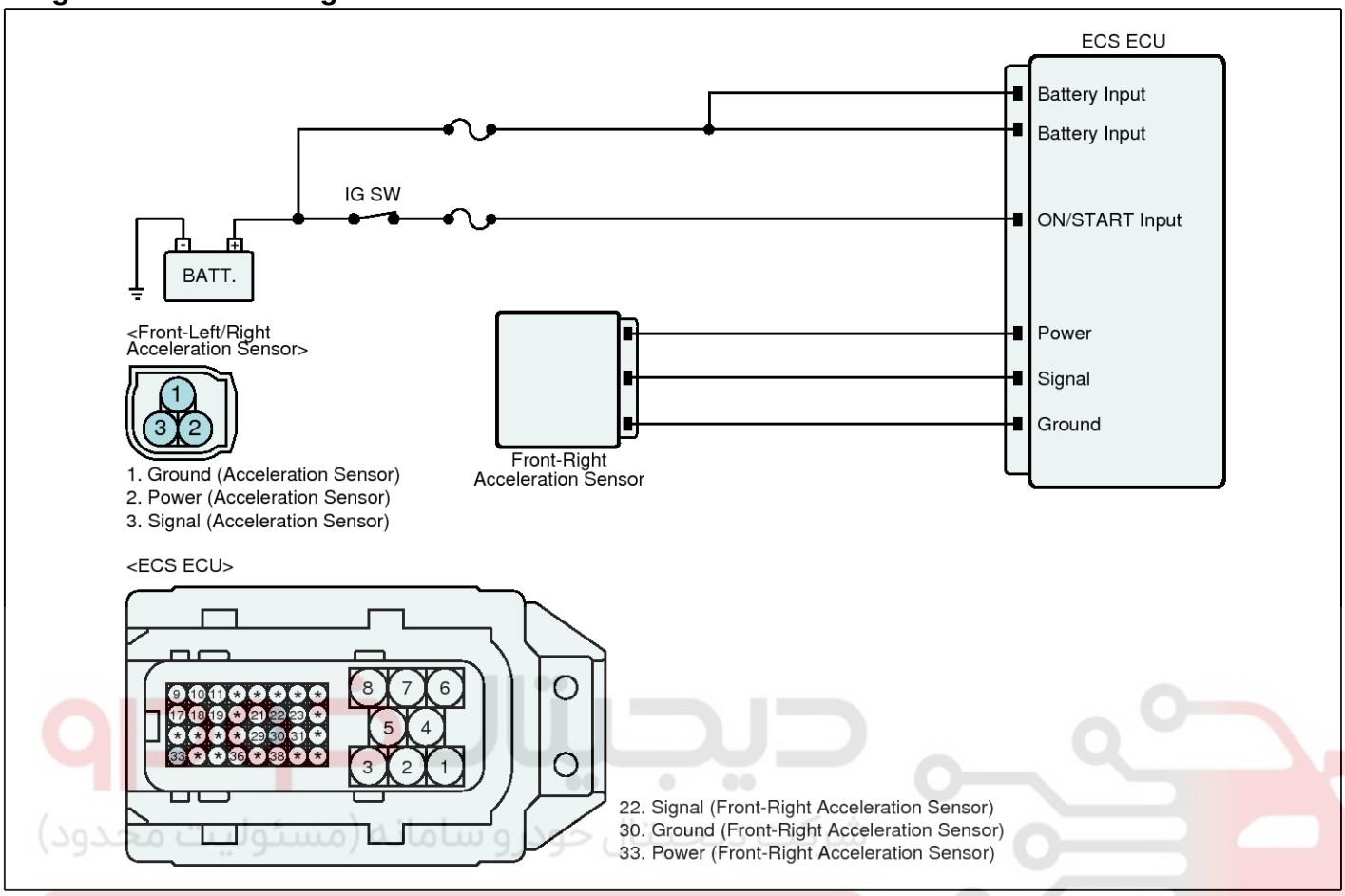

SBHSS9610L

Terminal and Connector Inspection

1. Many malfunctions in the electrical system are caused by poor harness(es) and terminal condition.

   Faults can also be caused by interference from other electrical systems, and mechanical or chemical damage.
2. Thoroughly check connectors for looseness, poor connection, bending, corrosion, contamination, deterioration, or damage.
3. Has a problem been found?

YES ▶ Repair as necessary and then go to "Verification of Vehicle Repair" procedure.

NO ▶ Go to "Power Circuit Inspection" procedure.

Power Circuit Inspection

■ Check for open or short

1. Disconnect front-right acceleration sensor connector.
2. IG "ON"
3. Measure voltage between power terminal of front-right acceleration sensor harness connector and chassis ground.

Specification : Approx. 5V

4. Is the measured value within specifications?

YES ▶ Go to "Ground Circuit Inspection" procedure.

NO ▶ Repair open or short in the power circuit between ECS ECU and acceleration sensor harness connector and then go to "Verification of Vehicle Repair" procedure.

Ground Circuit Inspection

■ Check for open

1. IG "OFF"
2. Disconnect front-right acceleration sensor connector and ECS ECU connector.
3. Measure resistance between ground terminals of front-right acceleration sensor harness connector and chassis ground.

Specification : Below approx. 1Ω

4. Is the measured value within specifications?

YES ▶ Go to "Signal Circuit Inspection" procedure.

NO ▶ Repair open in the ground circuit between E-CS ECU and acceleration sensor harness connector and then go to "Verification of Vehicle Repair" procedure.

Signal Circuit Inspection

■ Check for short

1. IG "OFF"
2. Disconnect front-right acceleration sensor connector and ECS ECU connector.
3. Measure resistance between power terminal and signal terminal of front-right acceleration sensor harness connector.
4. Measure resistance between ground terminal and signal terminal of front-right acceleration sensor harness connector.

Specification : Infinite

5. Is the measured value within specifications?

YES ▶ Go to "Check for open" procedure.

NO ▶ Repair short in the signal circuit between E-CS ECU and acceleration sensor and then go to "Verification of Vehicle Repair" procedure.

■ Check for open

1. IG "OFF"
2. Disconnect front-right acceleration sensor connector and ECS ECU connector.
3. Measure resistance between signal terminal of front-right acceleration sensor harness connector and signal terminal of ECS ECU harness connector.

Specification : Below approx. 1Ω

4. Is the measured value within specifications?

YES ▶ Go to "Component Inspection" procedure.

NO ▶ Repair open in the signal circuit between E-CS ECU and acceleration sensor and then go to "Verification of Vehicle Repair" procedure.

Component Inspection

1. IG "OFF"
2. IG "ON" & Engine "OFF"
3. After connecting scantool, Check DTC.
4. Using scantool, Clear DTC.
5. Again using scantool, Check DTC present.
6. Is the same DTC shown, agian?

YES ▶ Substitute with a known-good acceleration sensor and check for proper operation. If problem is corrected, replace acceleration sensor and then go to "Verification of Vehicle Repair" procedure.

NO ▶ This malfuction may temporarily happen by poor connection in the acceleration sensor. Go to "Verification of Vehicle Repair" procedure.

Verification of Vehicle Repair

After a repair, it is essential to verify that the fault has been corrected.

1. Connect scantool and select "Diagnostic Trouble Codes(DTCs)" mode
2. Using a scantool, Clear DTC.
3. Operate the vehicle within DTC Detecting Condition in General Information.
4. Using a scantool, Check DTC present.
5. Are any DTCs present ?

YES ▶ Go to the applicable troubleshooting procedure.

NO ▶ System performing to specification at this time.

C1281 Acceleration Sensor Rear

Component Location

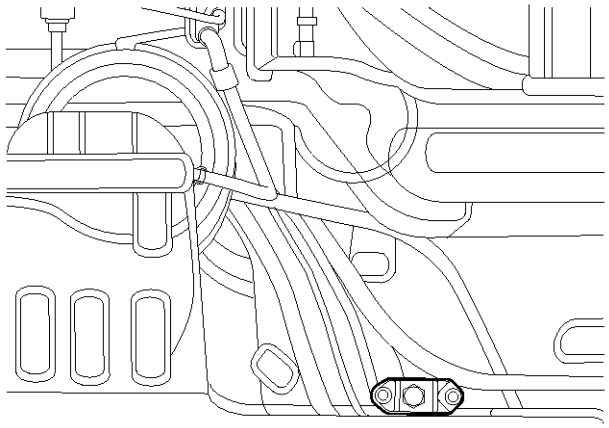

SBHSS8355D

General Description

The ECS is the abbreviation for "Electronic Control Suspension". This ECS system automatically controls the height of a vehicle level and the damping force of shock absorbers according to road condition. So it improves riding comfort and steering stability. Among components of the ECS system, a acceleration sensor is set up to detect the acceleration of a vehicle body. For more detailed measurement, three acceleration sensors are installed on the vehicle. The acceleration signals from these sensors are sent to ECS ECU. And ECS ECU controls the damping force of the vehicle dampers with other sensors' signals.

DTC Description

The ECS ECU monitors signals of rear acceleration sensor and if abnormal signals are detected, this DTC is set.

DTC Detecting Condition

Item		Detecting Condition	Possible cause
DTC Strategy		• Monitoring sensor's signals	• Open or short in the rear acceleration sensor • Faulty rear acceleration sensor
Threshold value		• The sensor's output voltage is above 4.5V under no other acceleration sensors' fault • The sensor's output voltage is below 0.5V under no other acceleration sensors' fault • When a vehicle is driving on rough road, the output signals of the sensor have a constant value.	
Fail-Safe	Airspring	• -	
	CDC damper	• Controlling current at certain value (600 mA)	

Diagnostic Circuit Diagram

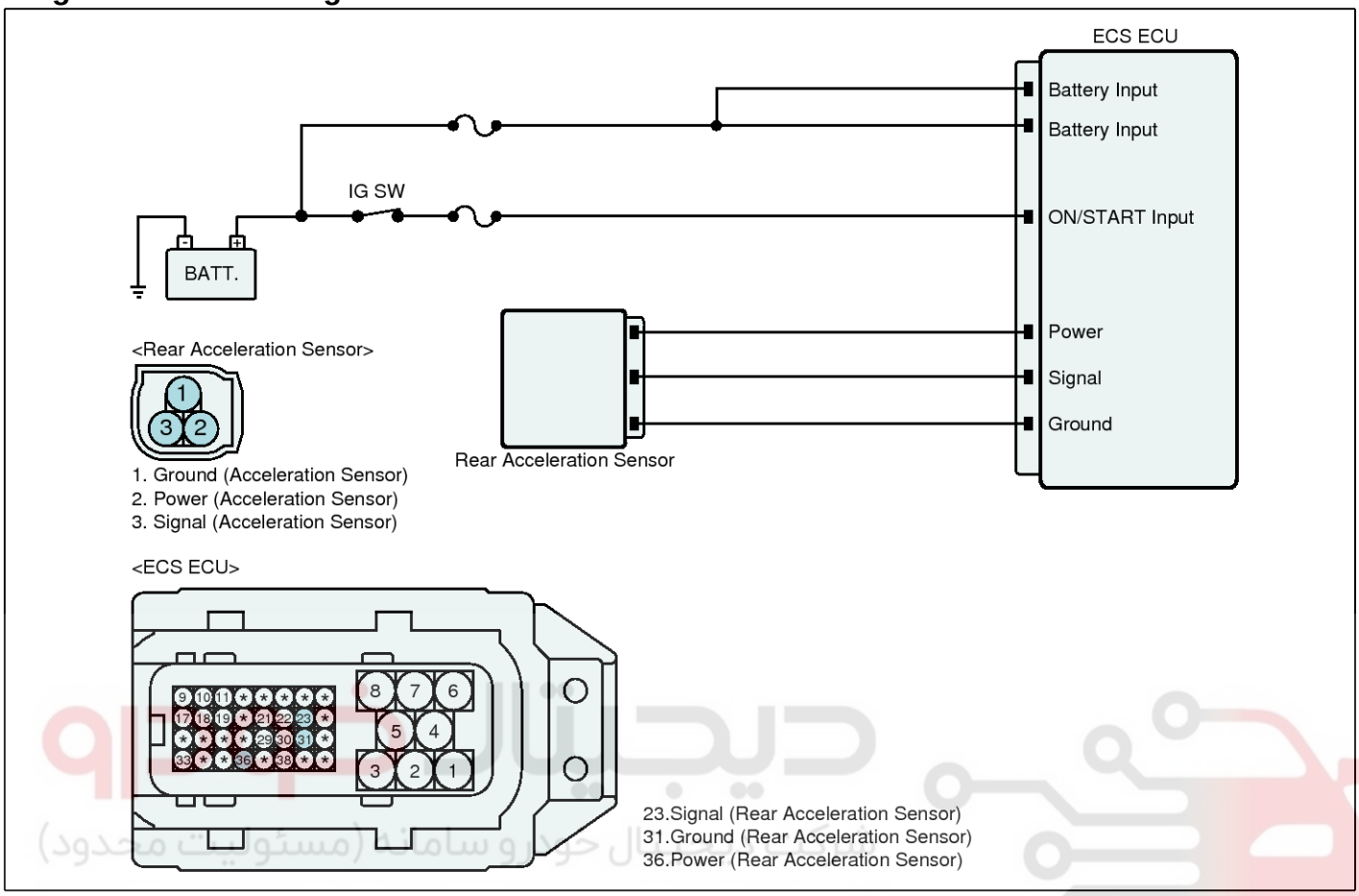

SBHSS9611L

Terminal and Connector Inspection

1. Many malfunctions in the electrical system are caused by poor harness(es) and terminal condition.

   Faults can also be caused by interference from other electrical systems, and mechanical or chemical damage.
2. Thoroughly check connectors for looseness, poor connection, bending, corrosion, contamination, deterioration, or damage.
3. Has a problem been found?

YES ▶ Repair as necessary and then go to "Verification of Vehicle Repair" procedure.

NO ▶ Go to "Power Circuit Inspection" procedure.

Power Circuit Inspection

■ Check for open or short

1. Disconnect rear acceleration sensor connector.
2. IG "ON"
3. Measure voltage between power terminal of rear acceleration sensor harness connector and chassis ground.

Specification : Approx. 5V

4. Is the measured value within specifications?

YES ▶ Go to "Ground Circuit Inspection" procedure.

NO ▶ Repair open or short in the power circuit between ECS ECU and acceleration sensor harness connector and then go to "Verification of Vehicle Repair" procedure.

Ground Circuit Inspection

■ Check for open

1. IG "OFF"
2. Disconnect rear acceleration sensor connector and ECS ECU connector.
3. Measure resistance between ground terminals of rear acceleration sensor harness connector and chassis ground.

Specification : Below approx. 1Ω

4. Is the measured value within specifications?

YES ▶ Go to "Signal Circuit Inspection" procedure.

NO ▶ Repair open in the ground circuit between ECS ECU and acceleration sensor harness connector and then go to "Verification of Vehicle Repair" procedure.

Signal Circuit Inspection

■ Check for short

1. IG "OFF"
2. Disconnect rear acceleration sensor connector and ECS ECU connector.
3. Measure resistance between power terminal and signal terminal of rear acceleration sensor harness connector.
4. Measure resistance between ground terminal and signal terminal of rear acceleration sensor harness connector.

Specification : Infinite

5. Is the measured value within specifications?

YES ▶ Go to "Check for open" procedure.

NO ▶ Repair short in the signal circuit between ECS ECU and acceleration sensor and then go to "Verification of Vehicle Repair" procedure.

■ Check for open

1. IG "OFF"
2. Disconnect rear acceleration sensor connector and ECS ECU connector.
3. Measure resistance between signal terminal of rear acceleration sensor harness connector and signal terminal of ECS ECU harness connector.

Specification : Below approx. 1Ω

4. Is the measured value within specifications?

YES ▶ Go to "Component Inspection" procedure.

NO ▶ Repair open in the signal circuit between ECS ECU and acceleration sensor and then go to "Verification of Vehicle Repair" procedure.

Component Inspection

1. IG "OFF"
2. IG "ON" & Engine "OFF"
3. After connecting scantool, Check DTC.
4. Using scantool, Clear DTC.
5. Again using scantool, Check DTC present.
6. Is the same DTC shown, agian?

YES ▶ Substitute with a known-good acceleration sensor and check for proper operation. If problem is corrected, replace acceleration sensor and then go to "Verification of Vehicle Repair" procedure.

NO ▶ This malfuction may temporarily happen by poor connection in the acceleration sensor. Go to "Verification of Vehicle Repair" procedure.

Verification of Vehicle Repair

After a repair, it is essential to verify that the fault has been corrected.

1. Connect scantool and select "Diagnostic Trouble Codes(DTCs)" mode
2. Using a scantool, Clear DTC.
3. Operate the vehicle within DTC Detecting Condition in General Information.
4. Using a scantool, Check DTC present.
5. Are any DTCs present ?

YES ▶ Go to the applicable troubleshooting procedure.

NO ▶ System performing to specification at this time.

C1284 Acceleration Sensor Voltage Failure

Component Location

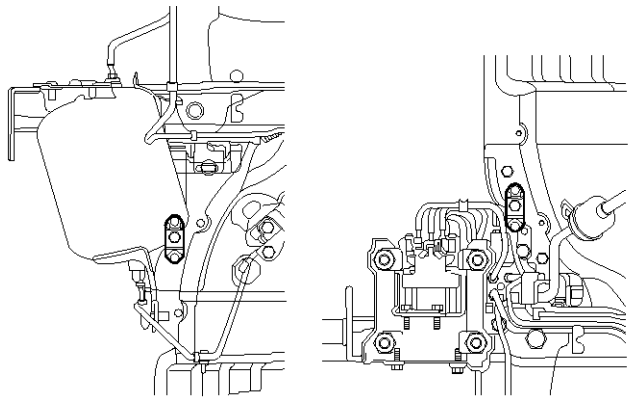

SBHSS8354D

General Description

The ECS is the abbreviation for "Electronic Control Suspension". This ECS system automatically controls the height of a vehicle level and the damping force of shock absorbers according to road condition. So it improves riding comfort and steering stability. Among components of the ECS system, a acceleration sensor is set up to detect the acceleration of a vehicle body. For more detailed measurement, three acceleration sensors are installed on the vehicle. The acceleration signals from these sensors are sent to ECS ECU. And ECS ECU controls the damping force of the vehicle dampers with other sensors' signals.

DTC Description

The ECS ECU monitors the state of power supply to acceleration sensors and if it is out of normal range, this DTC is set.

DTC Detecting Condition

Item		Detecting Condition	Possible cause
DTC Strategy		• Monitoring power supply to acceleration sensors	• Open or short in the power circuit of acceleration sensors • Faulty ECS ECU
Threshold value		• When the power supply voltage is below 4.75V or above 5.25V	
Fail-Safe	Airspring	• -	
	CDC damper	• Controlling current at certain value (600 mA)	

Diagnostic Circuit Diagram

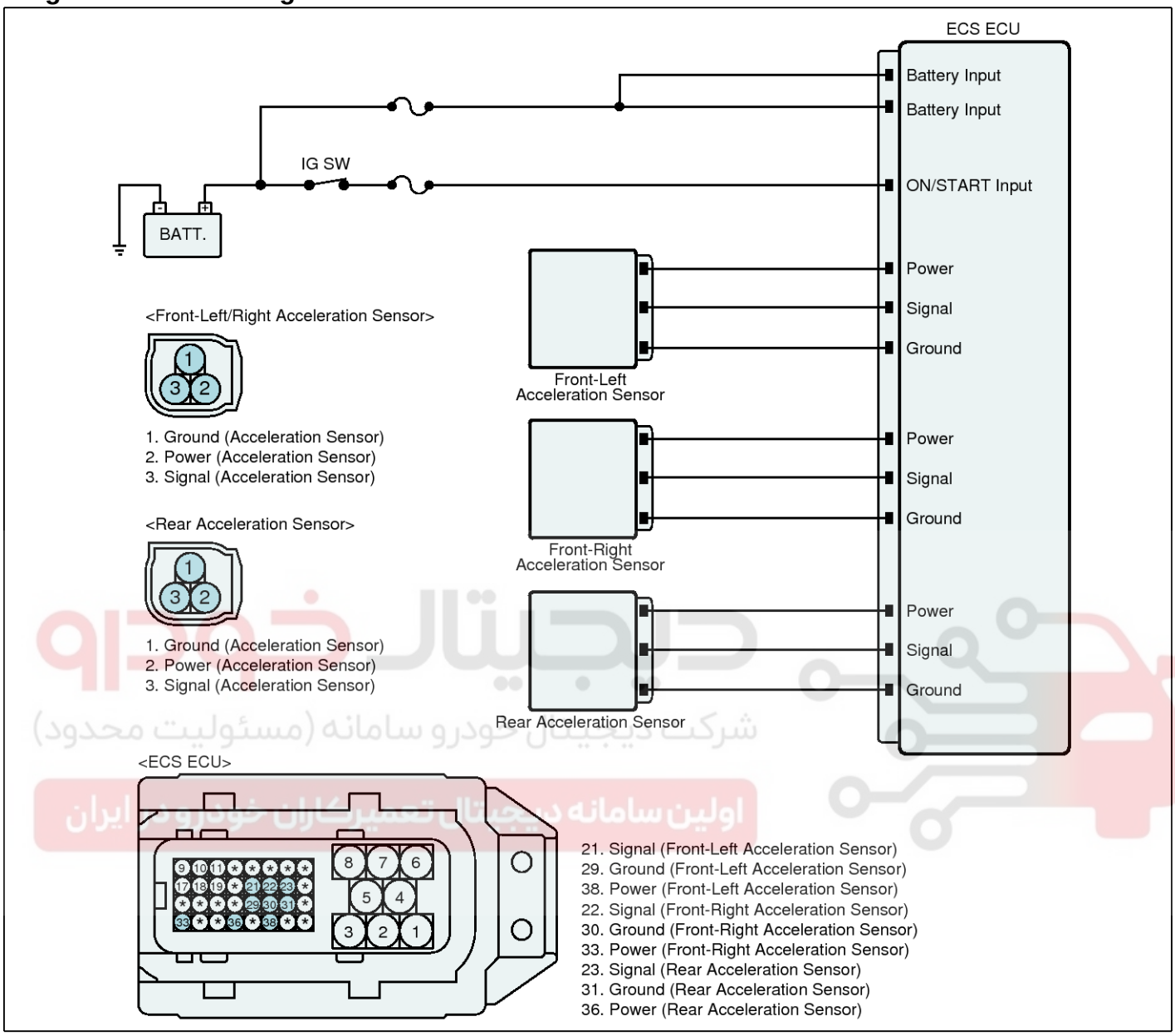

SBHSS9612L

Terminal and Connector Inspection

1. Many malfunctions in the electrical system are caused by poor harness(es) and terminal condition.

   Faults can also be caused by interference from other electrical systems, and mechanical or chemical damage.
2. Thoroughly check connectors for looseness, poor connection, bending, corrosion, contamination, deterioration, or damage.
3. Has a problem been found?

YES ▶ Repair as necessary and then go to "Verification of Vehicle Repair" procedure.

NO ▶ Go to "Power Circuit Inspection" procedure.

Power Circuit Inspection

■ Check for open/short

1. IG "ON"
2. Disconnect each acceleration sensor connector.
3. Measure voltage between power terminal of each acceleration sensor harness connector and chassis ground.

Specification : Approx. 5V

4. Is the measured value within specifications?

YES ▶ Substitute with a known-good ECS ECU and check for proper operation. If problem is corrected, replace ECS ECU and then go to "Verification of Vehicle Repair" procedure.
※ In a case of replacing ECS ECU, operate ECU Variant coding and height sensor's calibration by scantool

NO ▶ Repair open or short in power circuit between ECS ECU and each acceleration sensor, and then go to "Verification of vehicle Repair" procedure.

Verification of Vehicle Repair

After a repair, it is essential to verify that the fault has been corrected.

1. Connect scantool and select "Diagnostic Trouble Codes(DTCs)" mode
2. Using a scantool, Clear DTC.
3. Operate the vehicle within DTC Detecting Condition in General Information.
4. Using a scantool, Check DTC present.
5. Are any DTCs present ?

YES ▶ Go to the applicable troubleshooting procedure.

NO ▶ System performing to specification at this time.

C1502 ECS Switch Fault

General Description

The ECS is the abbreviation for "Electronic Control Suspension". This ECS system automatically controls the height of a vehicle level and the damping force of shock absorbers according to road condition. So it improves riding comfort and steering stability. The ECS switch is set up near the shift lever. When a vehicle enters on the rough road and a driver presses this ECS switch, the ECS ECU receives the driver's questing through the switch and then causes a vehicle's level to move up. Also, when a driver presses the ECS switch related to damping force, a vehicle enters into sports mode.

DTC Description

The ECS ECU monitors the signal of ECS switch and if it is detected as a switch fault or communication error, this DTC is set.

DTC Detecting Condition

Item		Detecting Condition	Possible cause
DTC Strategy		• Monitoring the ECS switch's signal	
Threshold value	Case 1	• When it is detected as the inside fault of ECS switch	• Faulty ECS switch(in the cons-ole switch) • Communication error
	Case 2	• When a communication with ECS switch is not done	
Fail-Safe	Airspring	• -	
	CDC damper	• -	

Diagnostic Circuit Diagram

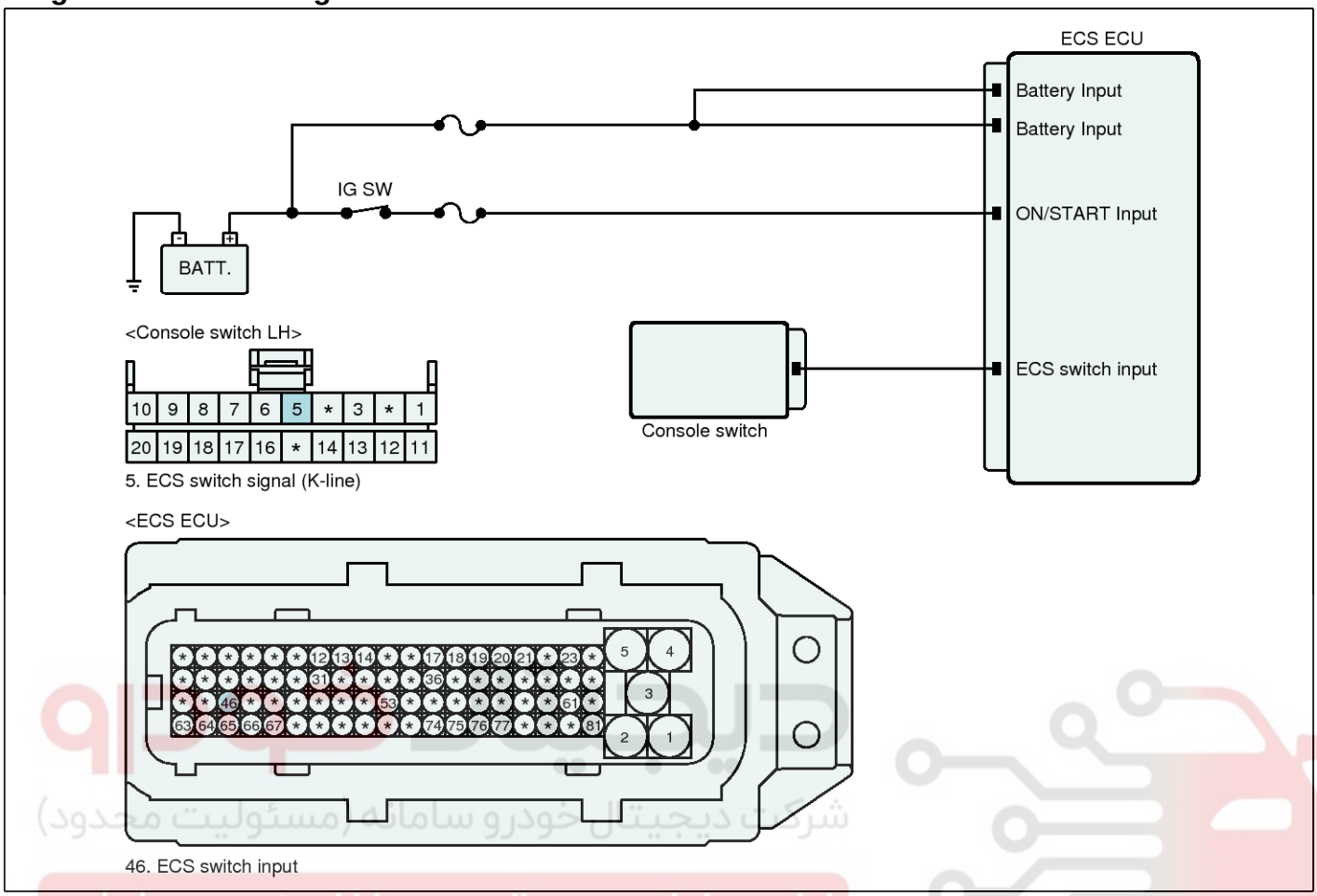

SBHSS9613L

Terminal and Connector Inspection

1. Many malfunctions in the electrical system are caused by poor harness(es) and terminal condition.

   Faults can also be caused by interference from other electrical systems, and mechanical or chemical damage.
2. Thoroughly check connectors for looseness, poor connection, bending, corrosion, contamination, deterioration, or damage.
3. Has a problem been found?

YES ▶ Repair as necessary and then go to "Verification of Vehicle Repair" procedure.

NO ▶ Go to "Signal Circuit Inspection" procedure.

Signal Circuit Inspection

■ Check for short

1. IG "OFF"
2. Disconnect console switch connector and ECS ECU connector.
3. Measure resistance between power terminal of console switch harness connector and chassis ground.

Specification : Infinite

4. Is the measured value within specifications?

YES ▶ Go to "Check for open" procedure.

NO ▶ Repair short in signal circuit between ECS ECU and console switch, and then go to "Verification of vehicle Repair" procedure.

■ Check for open

1. IG "OFF"
2. Disconnect console switch connector and ECS ECU connector.
3. Measure resistance between signal terminal of console switch harness connector and signal terminal of ECS ECU harness connector.

Specification : Below approx. 1Ω

4. Is the measured value within specifications?

YES ▶ Substitute with a known-good console switch and check for proper operation. If problem is corrected, replace console switch and then go to "Verification of Vehicle Repair" procedure.

NO ▶ Repair open in signal circuit between ECS ECU and console switch, and then go to "Verification of vehicle Repair" procedure.

Verification of Vehicle Repair

After a repair, it is essential to verify that the fault has been corrected.

1. Connect scantool and select "Diagnostic Trouble Codes(DTCs)" mode
2. Using a scantool, Clear DTC.
3. Operate the vehicle within DTC Detecting Condition in General Information.
4. Using a scantool, Check DTC present.
5. Are any DTCs present ?

YES ▶ Go to the applicable troubleshooting procedure.

NO ▶ System performing to specification at this time.

C1514 Valve Switch-ON Time Exceeded

Component Location

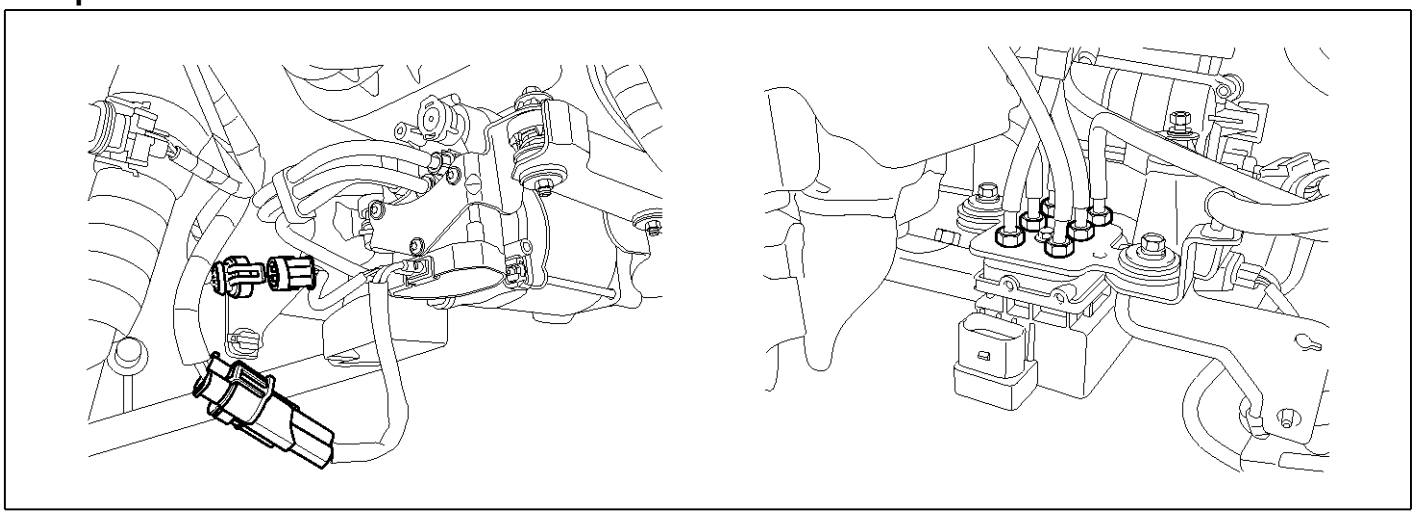

SBHSS8356D

General Description

The ECS is the abbreviation for "Electronic Control Suspension". This ECS system automatically controls the height of a vehicle level and the damping force of shock absorbers according to road condition. So it improves riding comfort and steering stability. Among the components of the ECS system, the compressor is installed near the front-right tire. This compressor's function is to charge the air into each air-spring or the reserver tank by the ECS ECU's order. Also, the solenoid valve assay is set up next to the compressor and consists of five solenoid valves. These valves' function is to distribute the air to each air-spring and the outside.

DTC Description

In a case that the compressor or solenoid valve assay is excessively operated, the ECS ECU expresses it as a DTC, that is, the ECU shows C1514 on the scantool. When the compressor doesn't work during a certain time, the DTC is erased.

DTC Detecting Condition

Item		Detecting Condition	Possible cause
DTC Strategy		• Monitoring valve's operating time	• Excessive compressor operated • Excessive solenoid valve assay operated
Threshold value		• When the solenoid valve assay is operated for more than 3 minutes out of 10 minutes • When the reverse valve is operated for more than 5 minutes out of 10 minutes	
Fail-Safe	Airspring	• Inhibition of a upward level control	
	CDC damper	• -	

* In a case of this DTC, C1514, if the leveling control is inhibited for a certain time below, this problem would solve. Next, go to "Verification of vehicle repair" procedure for verifying that the problem is completely solved

1) Causing by solenoid valve: At least for more than 7 minutes, do not work the leveling control.

2) Causing by reverse valve: At least for more than 5 minutes, do not work the leveling control.

Verification of Vehicle Repair

After a repair, it is essential to verify that the fault has been corrected.

1. Connect scantool and select "Diagnostic Trouble Codes(DTCs)" mode
2. Using a scantool, Clear DTC.
3. Operate the vehicle within DTC Detecting Condition in General Information.
4. Using a scantool, Check DTC present.
5. Are any DTCs present ?

YES ▶ Go to the applicable troubleshooting procedure.

NO ▶ System performing to specification at this time.

C1525 ECS Switch Signal Line Open/Short

General Description

The ECS is the abbreviation for "Electronic Control Suspension". This ECS system automatically controls the height of a vehicle level and the damping force of shock absorbers according to road condition. So it improves riding comfort and steering stability. The ECS switch is set up near the shift lever. When a vehicle enters on the rough road and a driver presses this ECS switch, the ECS ECU receives the driver's questing through the switch and then causes a vehicle's level to move up. Also, when a driver presses the ECS switch related to damping force, a vehicle enters into sports mode.

DTC Description

The ECS ECU monitors the state of ECS switch and if it is detected as a open or short circuit, this DTC is set.

DTC Detecting Condition

Item		Detecting Condition	Possible cause
DTC Strategy		• Monitoring ECS switch	• Open or shrot in the ECS switch circuit • Faulty ECS switch(in the console switch)
Threshold value		• when ECS switch has a open or short in its circuit	
Fail-Safe	Airspring	• -	
	CDC damper	• -	

Diagnostic Circuit Diagram

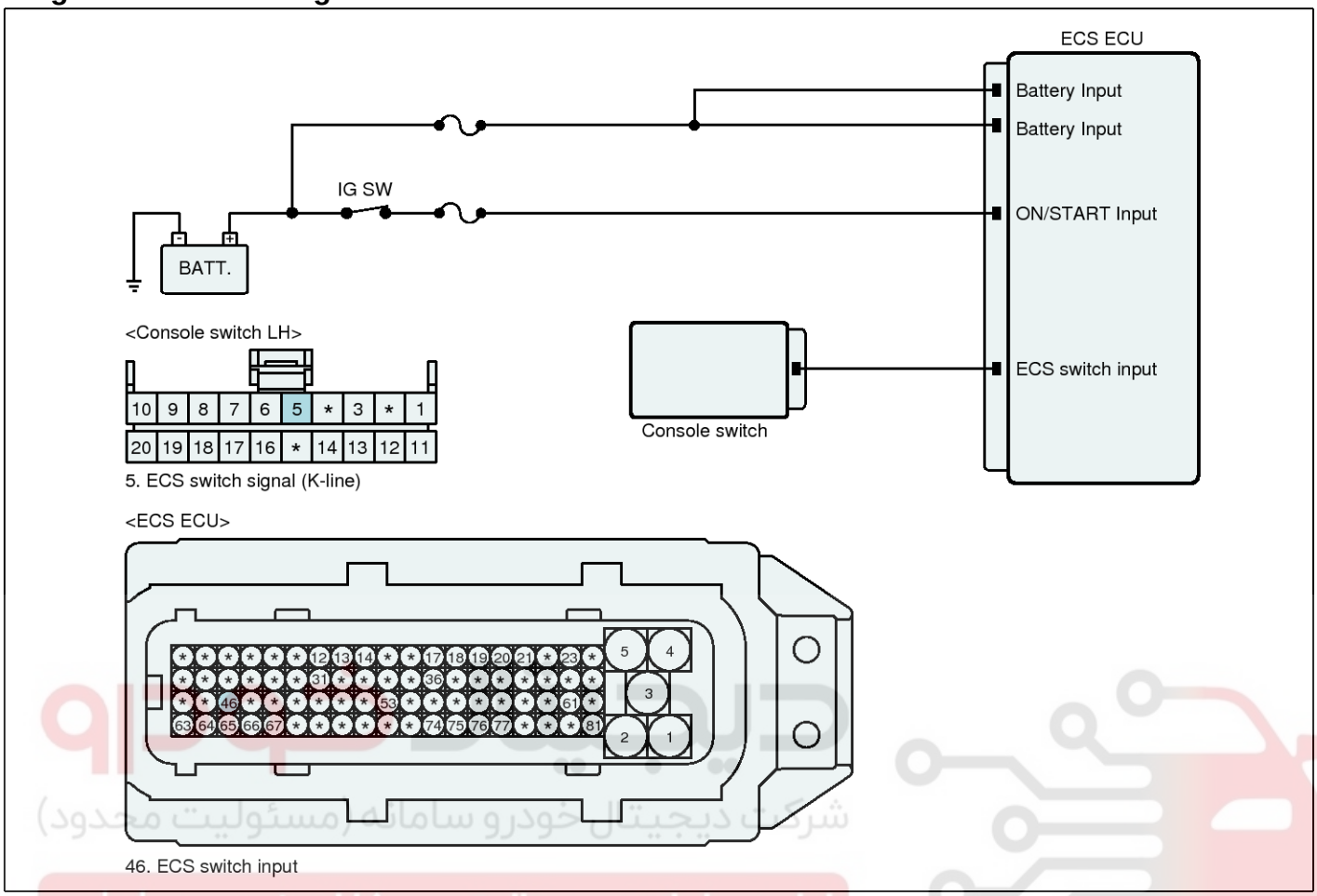

SBHSS9613L

Terminal and Connector Inspection

1. Many malfunctions in the electrical system are caused by poor harness(es) and terminal condition.

   Faults can also be caused by interference from other electrical systems, and mechanical or chemical damage.
2. Thoroughly check connectors for looseness, poor connection, bending, corrosion, contamination, deterioration, or damage.
3. Has a problem been found?

YES ▶ Repair as necessary and then go to "Verification of Vehicle Repair" procedure.

NO ▶ Go to "Signal Circuit Inspection" procedure.

Signal Circuit Inspection

■ Check for short

1. IG "OFF"
2. Disconnect console switch connector and ECS ECU connector.
3. Measure resistance between signal terminal of console switch harness connector and chassis ground.

Specification : Infinite

4. Is the measured value within specifications?

YES ▶ Go to "Check for open" procedure.

NO ▶ Repair short in signal circuit between ECS ECU and console switch, and then go to "Verification of vehicle Repair" procedure.

■ Check for open

1. IG "OFF"
2. Disconnect console switch connector and ECS ECU connector.
3. Measure resistance between signal terminal of console siwth harness connector and signal terminal of ECS ECU harness connector.

Specification : Below approx. 1Ω

4. Is the measured value within specifications?

YES ▶ Substitute with a known-good console switch and check for proper operation. If problem is corrected, replace console switch and then go to "Verification of Vehicle Repair" procedure.

NO ▶ Repair open in signal circuit between ECS ECU and console switch, and then go to "Verification of vehicle Repair" procedure.

Verification of Vehicle Repair

After a repair, it is essential to verify that the fault has been corrected.

1. Connect scantool and select "Diagnostic Trouble Codes(DTCs)" mode
2. Using a scantool, Clear DTC.
3. Operate the vehicle within DTC Detecting Condition in General Information.
4. Using a scantool, Check DTC present.
5. Are any DTCs present ?

YES ▶ Go to the applicable troubleshooting procedure.

NO ▶ System performing to specification at this time.

C1604 ECU Hardware Error

Component Location

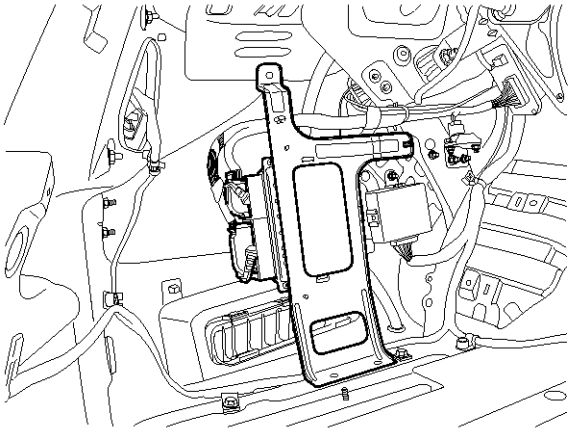

SBHSS8357D

General Description

The ECS is the abbreviation for "Electronic Control Suspension". This ECS system automatically controls the height of a vehicle level and the damping force of shock absorbers according to road condition. So it improves riding comfort and steering stability. Among components of the ECS system, the ECS ECU is installed at the left side of rear trunk in the vehicle. And it takes a central role in controlling a vehicle level and a damping force according to road conditions. The ECS ECU gets a vehicle's velocity and automatically controls the height of a vehicle.

DTC Description

The ECS ECU monitors ROM/RAM/EEPROM etc. and if it is detected as a fault inside, this DTC is set.

DTC Detecting Condition

Item		Detecting Condition	Possible cause
DTC Strategy		• Internal monitoring	• Faulty ECS ECU
Threshold value		• when there is a fault in the ROM/RAM/EEPROM etc. • when there is a communication error in the internal micom • when there is a error in the voltage comparision and calibration	
Fail-Safe	Airspring	• Inhibition of a vehicle level control	
	CDC damper	• Stopping the CDC damper's output (0 mA)	

Terminal and Connector Inspection

1. Many malfunctions in the electrical system are caused by poor harness(es) and terminal condition.

   Faults can also be caused by interference from other electrical systems, and mechanical or chemical damage.
2. Thoroughly check connectors for looseness, poor connection, bending, corrosion, contamination, deterioration, or damage.
3. Has a problem been found?

YES ▶ Repair as necessary and then go to "Verification of Vehicle Repair" procedure.

NO ▶ Go to "Component Inspection" procedure.

Component Inspection

1. IG "OFF"
2. IG "ON" & Engine "OFF"
3. After connecting scantool, Check DTC.
4. Using scantool, Clear DTC.
5. Again using scantool, Check DTC present.
6. Is the same DTC shown, agian?

YES ▶ Substitute with a known-good ECS ECU and check for proper operation. If problem is corrected, replace ECS ECU and then go to "Verification of Vehicle Repair" procedure.
※ In a case of replacing ECS ECU, operate ECU Variant coding and height sensor's calibration by scantool

NO ▶ Fault is intermittent caused by poor connection in ECS ECU's connector or was repaired and ECS ECU memory was not cleared.
▶ Repair or replace as necessary and then go to "Verification of Vehicle Repair" procedure.

Verification of Vehicle Repair

After a repair, it is essential to verify that the fault has been corrected.

1. Connect scantool and select "Diagnostic Trouble Codes(DTCs)" mode
2. Using a scantool, Clear DTC.
3. Operate the vehicle within DTC Detecting Condition in General Information.
4. Using a scantool, Check DTC present.
5. Are any DTCs present ?

YES ▶ Go to the applicable troubleshooting procedure.

NO ▶ System performing to specification at this time.

C1611 CAN Time-out ECM

Component Location

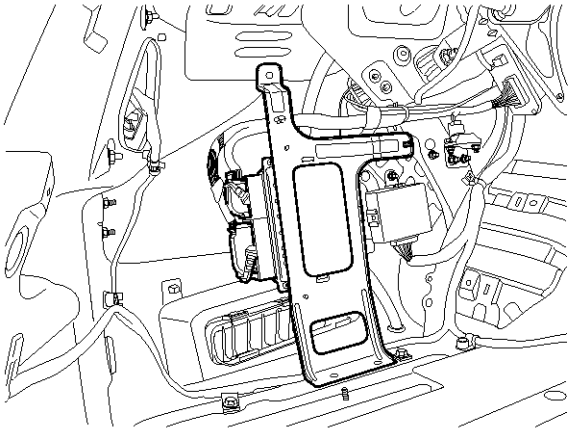

SBHSS8357D

General Description

The ECS is the abbreviation for "Electronic Control Suspension". This ECS system automatically controls the height of a vehicle level and the damping force of shock absorbers according to road condition. So it improves riding comfort and steering stability. For controlling a vehicle level and a damping force of vehicle damper, the ECS system needs various different signals from many sensors or other control modules. These signals are delivered to the ECS ECU through CAN communication line.

DTC Description

The ECS ECU checks CAN communication circuit for a normal operation and if the messages from engine control module do not receive for a certain time, this DTC is set.

DTC Detecting Condition

Item		Detecting Condition	Possible cause
DTC Strategy		• Monitoring CAN messages	• An error in the CAN communication line • Faulty ECM
Threshold value		• when the messages from ECM don't get within a normal system voltage	
Fail-Safe	Airspring	• Adjusting a vehicle level to Normal level	
	CDC damper	• Stopping the CDC damper's output (0 mA)	

Diagnostic Circuit Diagram

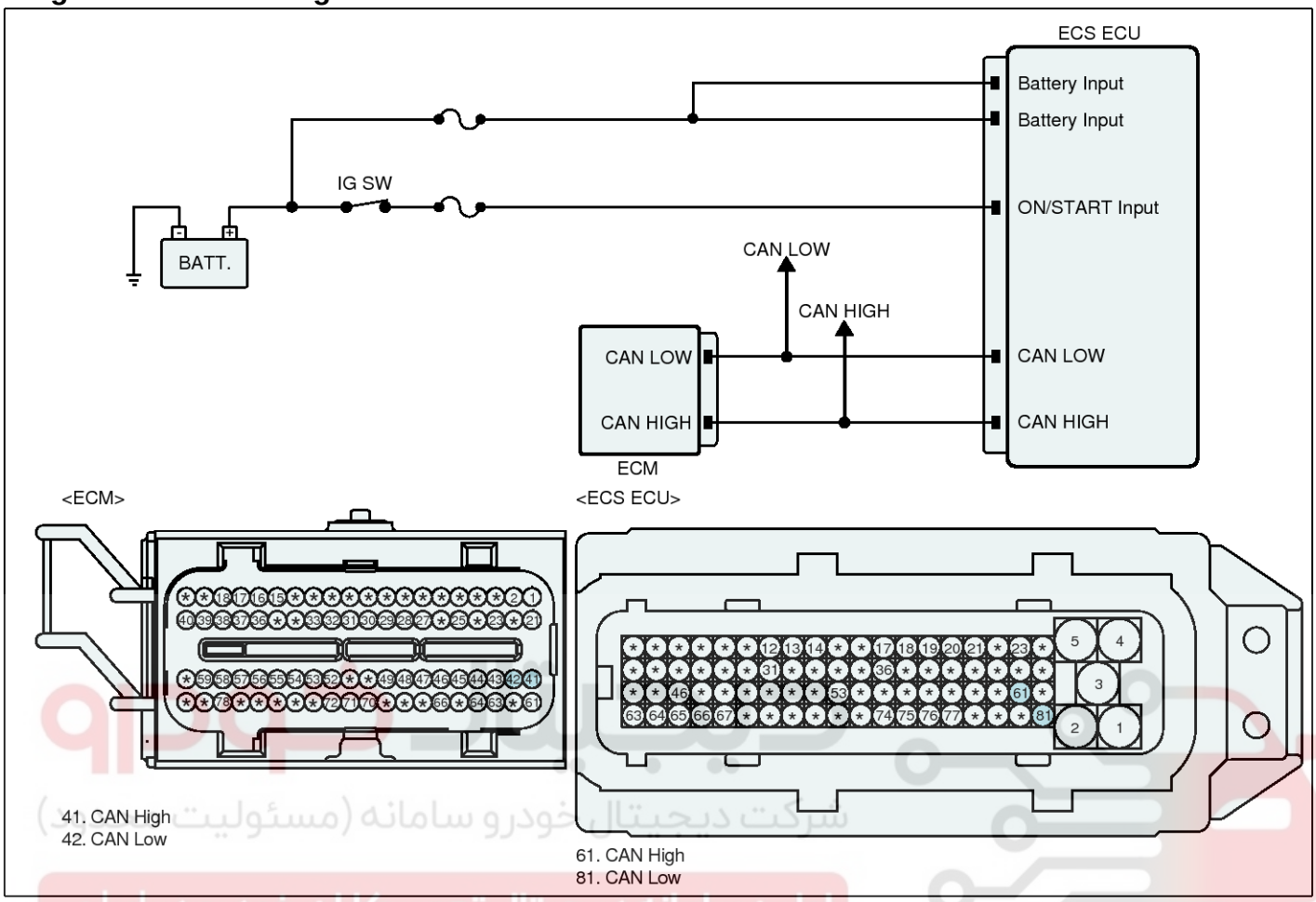

SBHSS9614L

Terminal and Connector Inspection

1. Many malfunctions in the electrical system are caused by poor harness(es) and terminal condition.

   Faults can also be caused by interference from other electrical systems, and mechanical or chemical damage.
2. Thoroughly check connectors for looseness, poor connection, bending, corrosion, contamination, deterioration, or damage.
3. Has a problem been found?

YES ▶ Repair as necessary and then go to "Verification of Vehicle Repair" procedure.

NO ▶ Go to "CAN Communication line Inspection" procedure.

CAN Communication Inspection

■ Check CAN communication line

1. IG "OFF"
2. Disconnect ECM connector and ECS ECU connector.
3. Measure resistance between CAN-High terminal of ECM harness connector and CAN-High terminal of ECS ECU harness connector.
4. Measure resistance between CAN-Low terminal of ECM harness connector and CAN-Low terminal of ECS ECU harness connector.

Specification : Below approx. 1Ω

5. Is the measured value within specification?

YES ▶ Go to "Component Inspection" procedure.

NO ▶ Repair open in the CAN communication line between ECM and ECS ECU, go to "Verification of Vehicle Repair" procedure.

Component Inspection

1. IG "OFF"
2. IG "ON" & Engine "OFF"
3. After connecting scantool, Check DTC.
4. Using scantool, Clear DTC.
5. Again using scantool, Check DTC present.
6. Is the same DTC shown, agian?

YES ▶ Substitute with a known-good ECM and check for proper operation. If problem is corrected, replace ECM and then go to "Verification of Vehicle Repair" procedure..

NO ▶ Fault is intermittent caused by poor connection in ECS ECU's connector or was repaired and ECS ECU memory was not cleared.
▶ Repair or replace as necessary and then go to "Verification of Vehicle Repair" procedure.

Verification of Vehicle Repair

After a repair, it is essential to verify that the fault has been corrected.

1. Connect scantool and select "Diagnostic Trouble Codes(DTCs)" mode
2. Using a scantool, Clear DTC.
3. Operate the vehicle within DTC Detecting Condition in General Information.
4. Using a scantool, Check DTC present.
5. Are any DTCs present ?

YES ▶ Go to the applicable troubleshooting procedure.

NO ▶ System performing to specification at this time.

C1612 CAN Time-out TCM

Component Location

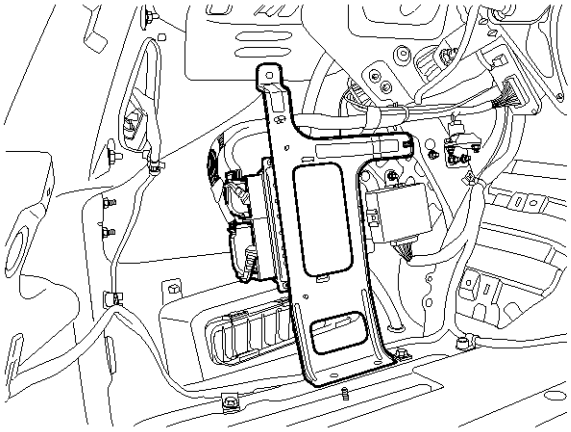

SBHSS8357D

General Description

The ECS is the abbreviation for "Electronic Control Suspension". This ECS system automatically controls the height of a vehicle level and the damping force of shock absorbers according to road condition. So it improves riding comfort and steering stability. For controlling a vehicle level and a damping force of vehicle damper, the ECS system needs various different signals from many sensors or other control modules. These signals are delivered to the ECS ECU through CAN communication line.

DTC Description

The ECS ECU checks CAN communication circuit for a normal operation and if the messages from transmission control module do not receive for a certain time, this DTC is set.

DTC Detecting Condition

Item		Detecting Condition	Possible cause
DTC Strategy		• Monitoring CAN messages	• An error in the CAN communication line • Faulty TCM
Threshold value		• when the messages from TCM don't get within a normal system voltage	
Fail-Safe	Airspring	• -	
	CDC damper	• -	

Diagnostic Circuit Diagram

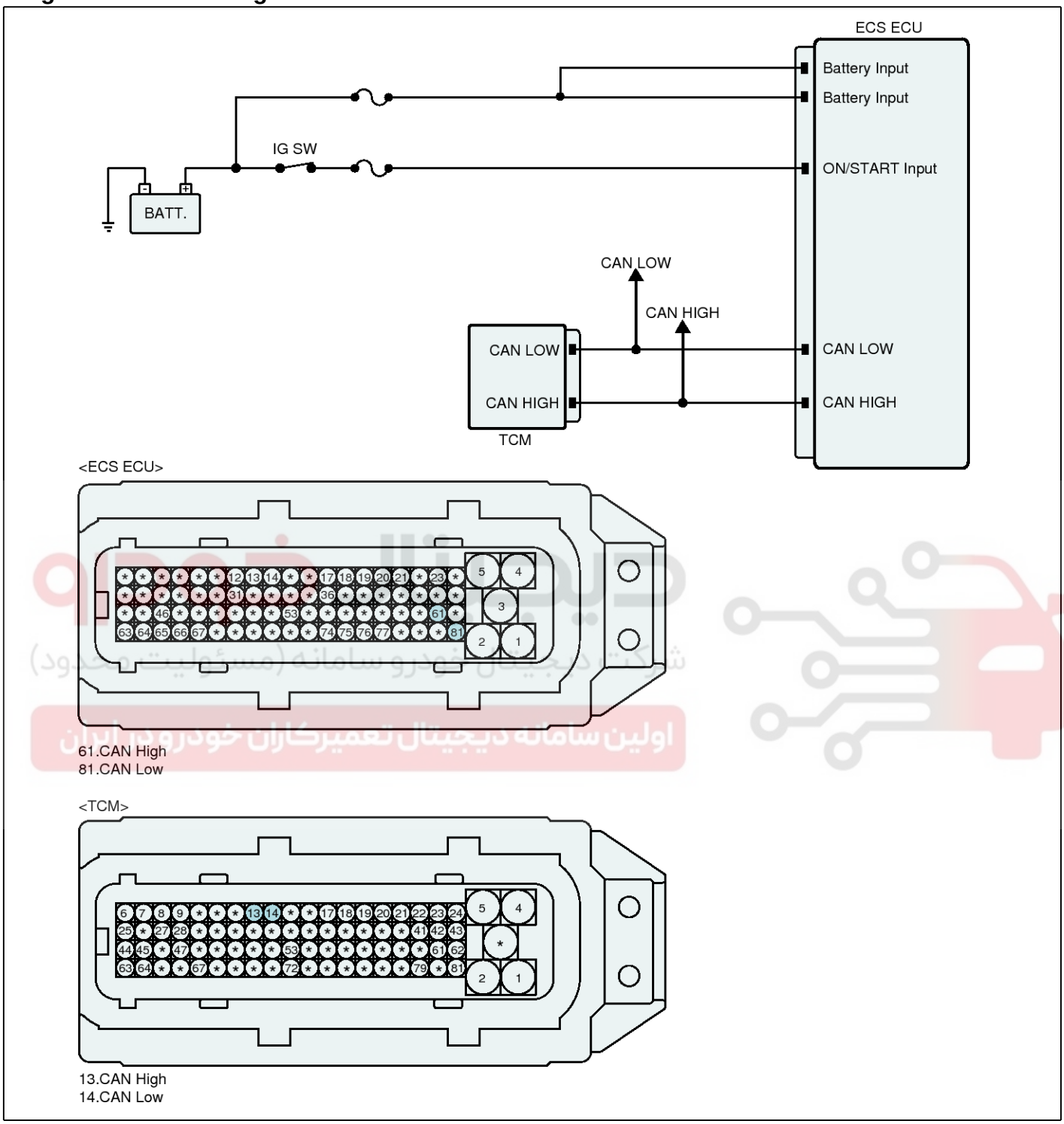

SBHSS9615L

Terminal and Connector Inspection

1. Many malfunctions in the electrical system are caused by poor harness(es) and terminal condition.

   Faults can also be caused by interference from other electrical systems, and mechanical or chemical damage.
2. Thoroughly check connectors for looseness, poor connection, bending, corrosion, contamination, deterioration, or damage.
3. Has a problem been found?

YES ▶ Repair as necessary and then go to "Verification of Vehicle Repair" procedure.

NO ▶ Go to "CAN Communication line Inspection" procedure.

CAN Communication line Inspection

■ Check CAN communication line

1. IG "OFF"
2. Disconnect TCM connector and ECS ECU connector.
3. Measure resistance between CAN-High terminal of TCM harness connector and CAN-High terminal of ECS ECU harness connector.
4. Measure resistance between CAN-Low terminal of TCM harness connector and CAN-Low terminal of ECS ECU harness connector.

Specification : Below approx. 1Ω

5. Is the measured value within specification?

YES ▶ Go to "Component Inspection" procedure.

NO ▶ Repair open in the CAN communication line between TCM and ECS ECU, go to "Verification of Vehicle Repair" procedure.

Component Inspection

1. IG "OFF"
2. IG "ON" & Engine "OFF"
3. After connecting scantool, Check DTC.
4. Using scantool, Clear DTC.
5. Again using scantool, Check DTC present.
6. Is the same DTC shown, agian?

YES ▶ Substitute with a known-good TCM and check for proper operation. If problem is corrected, replace TCM and then go to "Verification of Vehicle Repair" procedure.

NO ▶ Fault is intermittent caused by poor connection in TCM or ECS ECU's connector or was repaired and ECS ECU memory was not cleared.

▶ Repair or replace as necessary and then go to "Verification of Vehicle Repair" procedure.

Verification of Vehicle Repair

After a repair, it is essential to verify that the fault has been corrected.

1. Connect scantool and select "Diagnostic Trouble Codes(DTCs)" mode
2. Using a scantool, Clear DTC.
3. Operate the vehicle within DTC Detecting Condition in General Information.
4. Using a scantool, Check DTC present.
5. Are any DTCs present ?

YES ▶ Go to the applicable troubleshooting procedure.

NO ▶ System performing to specification at this time.

C1616 CAN Bus off

Component Location

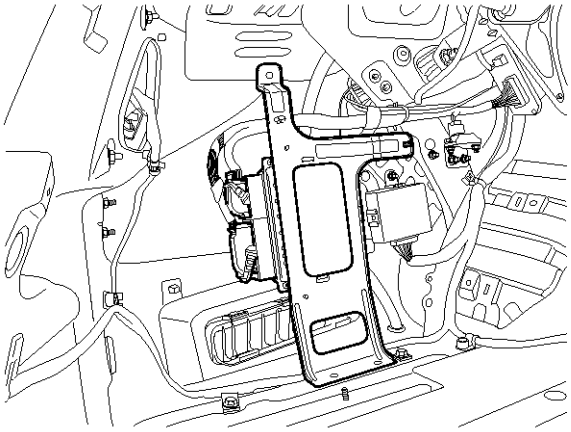

SBHSS8357D

General Description

The ECS is the abbreviation for "Electronic Control Suspension". This ECS system automatically controls the height of a vehicle level and the damping force of shock absorbers according to road condition. So it improves riding comfort and steering stability. For controlling a vehicle level and a damping force of vehicle damper, the ECS system needs various different signals from many sensors or other control modules. These signals are delivered to the ECS ECU through CAN communication line.

DTC Description

The ECS ECU checks CAN communication circuit for a normal operation and if it is detected that there is an error in CAN bus line, this DTC is set.

DTC Detecting Condition

Item		Detecting Condition	Possible cause
DTC Strategy		• Monitoring CAN messages	• An error in the CAN communication line • Faulty ECS ECU
Threshold value		• when it is detected as a CAN bus-off	
Fail-Safe	Airspring	• Adjusting a vehicle level to Normal level	
	CDC damper	• Stopping the CDC damper's output (0 mA)	

Diagnostic Circuit Diagram

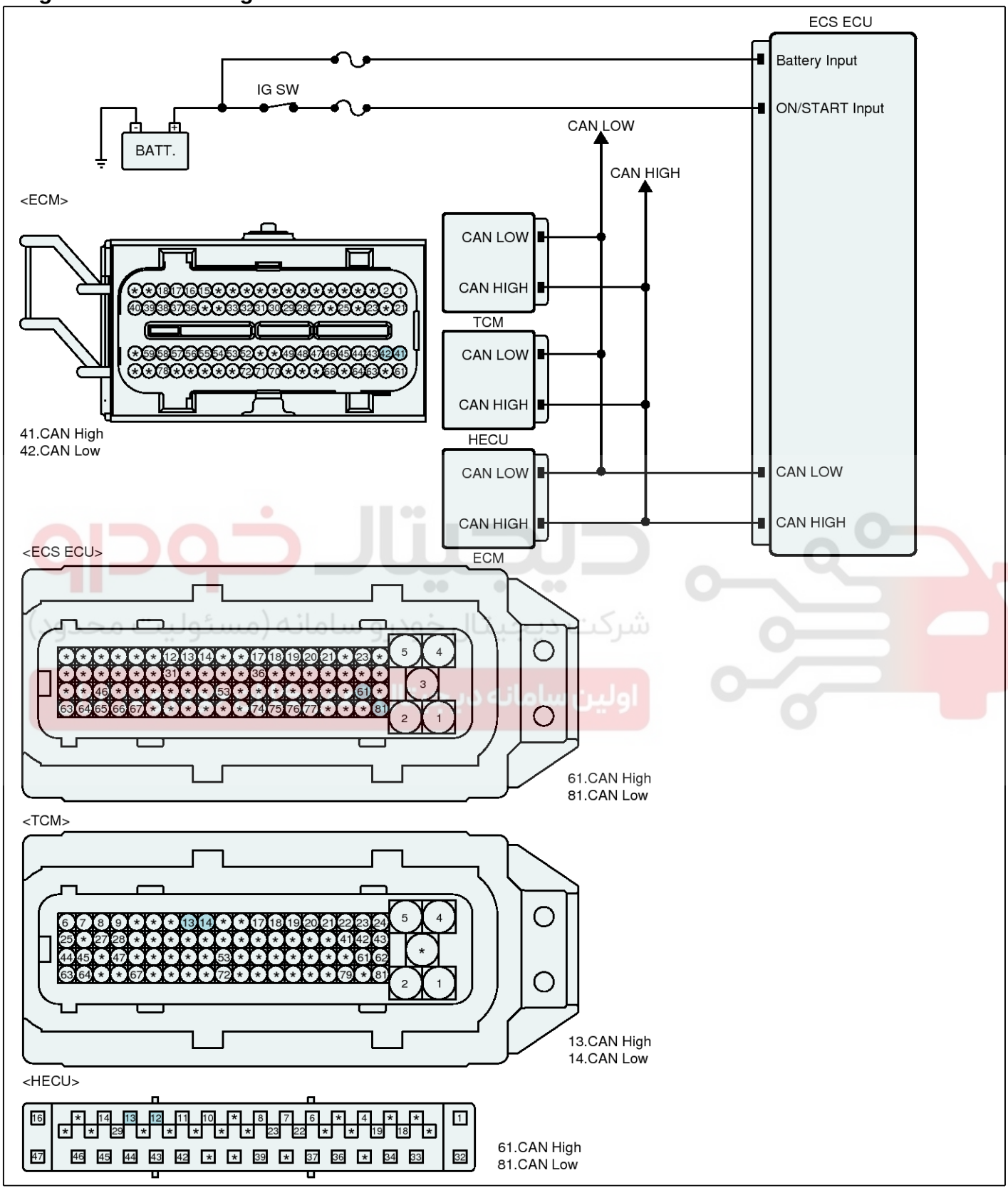

SBHSS9616L

Terminal and Connector Inspection

1. Many malfunctions in the electrical system are caused by poor harness(es) and terminal condition.

   Faults can also be caused by interference from other electrical systems, and mechanical or chemical damage.
2. Thoroughly check connectors for looseness, poor connection, bending, corrosion, contamination, deterioration, or damage.
3. Has a problem been found?

YES ▶ Repair as necessary and then go to "Verification of Vehicle Repair" procedure.

NO ▶ Go to "CAN Communication line Inspection" procedure.

CAN Communication line Inspection

■ Check CAN communication line

1. IG "OFF"
2. Disconnect ECM/HECU/TCM connector and ECS ECU connector.
3. Measure resistance between CAN-High terminal of ECM/HECU/TCM harness connector and CAN-High terminal of ECS ECU harness connector.
4. Measure resistance between CAN-Low terminal of ECM/HECU/TCM harness connector and CAN-Low terminal of ECS ECU harness connector.

Specification : Below approx. 1Ω

5. Is the measured value within specification?

YES ▶ Go to "Component Inspection" procedure.

NO ▶ Repair open in the CAN communication line between ECM/HECU/TCM and ECS ECU, go to "Verification of Vehicle Repair" procedure.

Component Inspection

1. IG "OFF"
2. IG "ON" & Engine "OFF"
3. After connecting scantool, Check DTC.
4. Using scantool, Clear DTC.
5. Again using scantool, Check DTC present.
6. Is the same DTC shown, agian?

YES ▶ Substitute with a known-good ECS ECU and check for proper operation. If problem is corrected, replace ECS ECU and then go to "Verification of Vehicle Repair" procedure.
※ In a case of replacing ECS ECU, operate ECU Variant coding and height sensor's calibration by scantool

NO ▶ Fault is intermittent caused by poor connection in ECS ECU's connector or was repaired and ECS ECU memory was not cleared.
▶ Repair or replace as necessary and then go to "Verification of Vehicle Repair" procedure.

Verification of Vehicle Repair

After a repair, it is essential to verify that the fault has been corrected.

1. Connect scantool and select "Diagnostic Trouble Codes(DTCs)" mode
2. Using a scantool, Clear DTC.
3. Operate the vehicle within DTC Detecting Condition in General Information.
4. Using a scantool, Check DTC present.
5. Are any DTCs present ?

YES ▶ Go to the applicable troubleshooting procedure.

NO ▶ System performing to specification at this time.

C1620 1st set-up not completed(Height Sensor Not Cailbrated)

Component Location

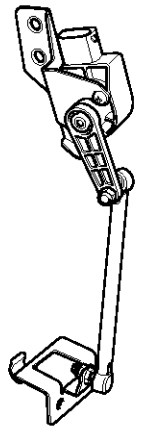

SBHSS8351D

General Description

The ECS is the abbreviation for "Electronic Control Suspension". This ECS system automatically controls the height of a vehicle level and the damping force of shock absorbers according to road condition. So it improves riding comfort and steering stability. When the height sensor is set up in the vehicle, there is a possibility to cause a tolerance. So, during producing a vehicle in the manufactory, the height sensor's calibration procedure is done for correcting these tolerance. If the calibration procedre isn't done, the ECS ECU would make a warning light to turn on.

DTC Description

When the height sensor's calibration is not carried out, the ECS ECU shows this DTC and turns on the warning light on the cluster.

DTC Detecting Condition

Item		Detecting Condition	Possible cause
DTC Strategy		• Monitoring the operation of the height sensor's calibration	• Calibration not carried out
Threshold value		• In a case of not carring out the height sensor's calibration procedure	
Fail-Safe	Airspring	• -	
	CDC damper	• -	

Monitor Scantool Data

1. Make a vehicle's level to normal level.
2. After IG "OFF", connect scantool to Data Link Connector(DLC) and then, IG "ON"
3. Using scantool, Operate "Height sensor's Calibration" program.
4. Using a tape-measure, Enter the actual height into the scantool.
5. Compare the current height of scantool with the actual height.
6. In a case of getting out of specification below , Repeat from procedure No.3 to procedure No.5, again.

Specification - Front-wheel : 393±10mm
- Rear-wheel : 386±10mm

7. Is the height sensor's calibration completed?

YES ▶ Go to "Verification of Vehicle Repair" procedure.

NO ▶ Repeat the height sensor's calibration.

Verification of Vehicle Repair

After a repair, it is essential to verify that the fault has been corrected.

1. Connect scantool and select "Diagnostic Trouble Codes(DTCs)" mode
2. Using a scantool, Clear DTC.
3. Operate the vehicle within DTC Detecting Condition in General Information.
4. Using a scantool, Check DTC present.
5. Are any DTCs present ?

YES ▶ Go to the applicable troubleshooting procedure.

NO ▶ System performing to specification at this time.

C1623 CAN Time-out Steering Angle Sensor

Component Location

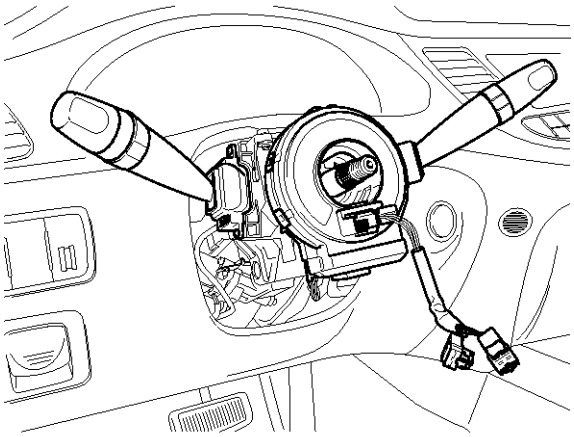

SBHSS8353D

General Description

The ECS is the abbreviation for "Electronic Control Suspension". This ECS system automatically controls the height of a vehicle level and the damping force of shock absorbers according to road condition. So it improves riding comfort and steering stability. For controlling a vehicle level and a damping force of vehicle damper, the ECS system needs various different signals from many sensors or other control modules. These signals are delivered to the ECS ECU through CAN communication line.

DTC Description

The ECS ECU checks CAN communication circuit for a normal operation and if the messages from steering anlge sensor don't receive for a certain time, this DTC is set.

DTC Detecting Condition

Item		Detecting Condition	Possible cause
DTC Strategy		• Monitoring CAN messages	• An error in the CAN communication line • Faulty SAS
Threshold value		• when the messages from SAS don't get within a normal system voltage	
Fail-Safe	Airspring	• -	
	CDC damper	• Stopping the CDC damper's output (0 mA)	

Diagnostic Circuit Diagram

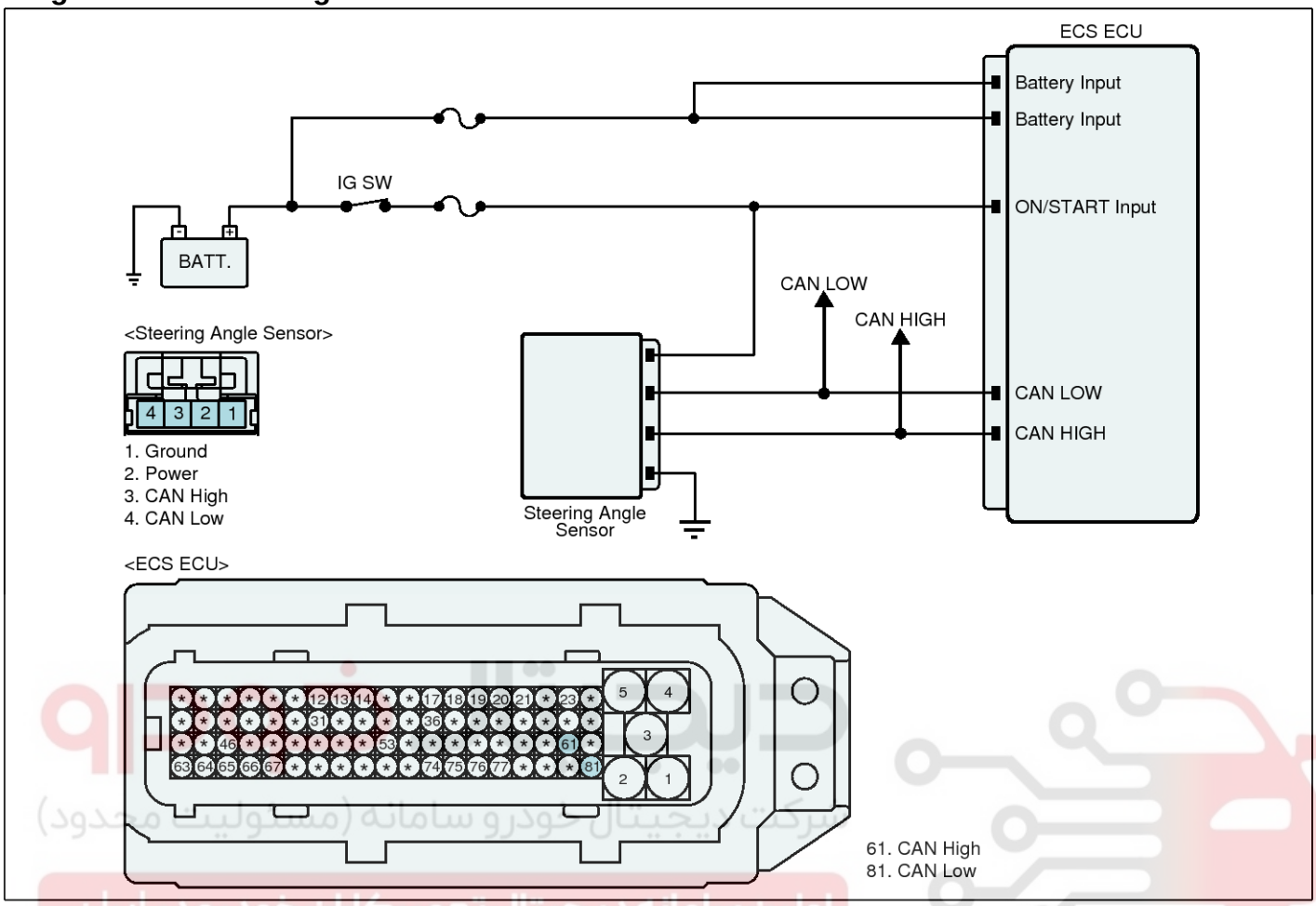

SBHSS9608L

Terminal and Connector Inspection

1. Many malfunctions in the electrical system are caused by poor harness(es) and terminal condition.

   Faults can also be caused by interference from other electrical systems, and mechanical or chemical damage.
2. Thoroughly check connectors for looseness, poor connection, bending, corrosion, contamination, deterioration, or damage.
3. Has a problem been found?

YES ▶ Repair as necessary and then go to "Verification of Vehicle Repair" procedure.

NO ▶ Go to "CAN Communication line Inspection" procedure.

CAN Communication line Inspection

■ Check CAN communication line

1. IG "OFF"
2. Disconnect Steering Angle Sensor(SAS) connector and ECS ECU connector.
3. Measure resistance between CAN-High terminal of SAS harness connector and CAN-High terminal of ECS ECU harness connector.
4. Measure resistance between CAN-Low terminal of SAS harness connector and CAN-Low terminal of ECS ECU harness connector.

Specification : Below approx. 1Ω

5. Is the measured value within specification?

YES ▶ Go to "Component Inspection" procedure.

NO ▶ Repair open in the CAN communication line between SAS and ECS ECU, go to "Verification of Vehicle Repair" procedure.

Component Inspection

1. IG "OFF"
2. IG "ON" & Engine "OFF"
3. After connecting scantool, Check DTC.
4. Using scantool, Clear DTC.
5. Again using scantool, Check DTC present.
6. Is the same DTC shown, agian?

YES ▶ Substitute with a known-good SAS and check for proper operation. If problem is corrected, replace SAS and then go to "Verification of Vehicle Repair" procedure.

NO ▶ Fault is intermittent caused by poor connection in SAS or ECS ECU's connector or was repaired and ECS ECU memory was not cleared.
▶ Repair or replace as necessary and then go to "Verification of Vehicle Repair" procedure.

Verification of Vehicle Repair

After a repair, it is essential to verify that the fault has been corrected.

1. Connect scantool and select "Diagnostic Trouble Codes(DTCs)" mode
2. Using a scantool, Clear DTC.
3. Operate the vehicle within DTC Detecting Condition in General Information.
4. Using a scantool, Check DTC present.
5. Are any DTCs present ?

YES ▶ Go to the applicable troubleshooting procedure.

NO ▶ System performing to specification at this time.

C1625 CAN Time-out ABS/ESC(ESP)

Component Location

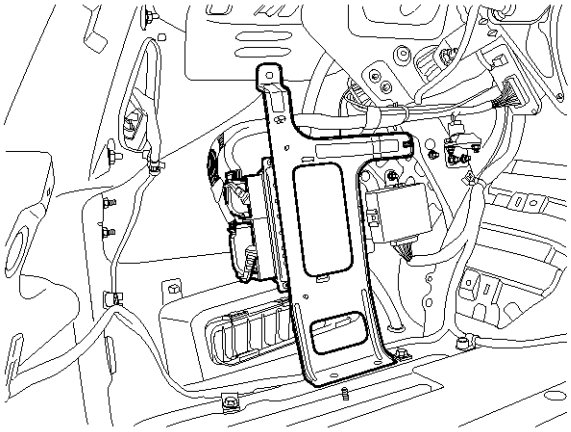

SBHSS8357D

General Description

The ECS is the abbreviation for "Electronic Control Suspension". This ECS system automatically controls the height of a vehicle level and the damping force of shock absorbers according to road condition. So it improves riding comfort and steering stability. For controlling a vehicle level and a damping force of vehicle damper, the ECS system needs various different signals from many sensors or other control modules. These signals are delivered to the ECS ECU through CAN communication line.

DTC Description

The ECS ECU checks CAN communication circuit for a normal operation and if the messages from HECU do not receive for a certain time, this DTC is set.

DTC Detecting Condition

Item		Detecting Condition	Possible cause
DTC Strategy		• Monitoring CAN messages	• An error in the CAN communication line • Faulty HECU
Threshold value		• when the messages from HECU don't get within a normal system voltage	
Fail-Safe	Airspring	• -	
	CDC damper	• Stopping the CDC damper's output (0 mA)	

Diagnostic Circuit Diagram

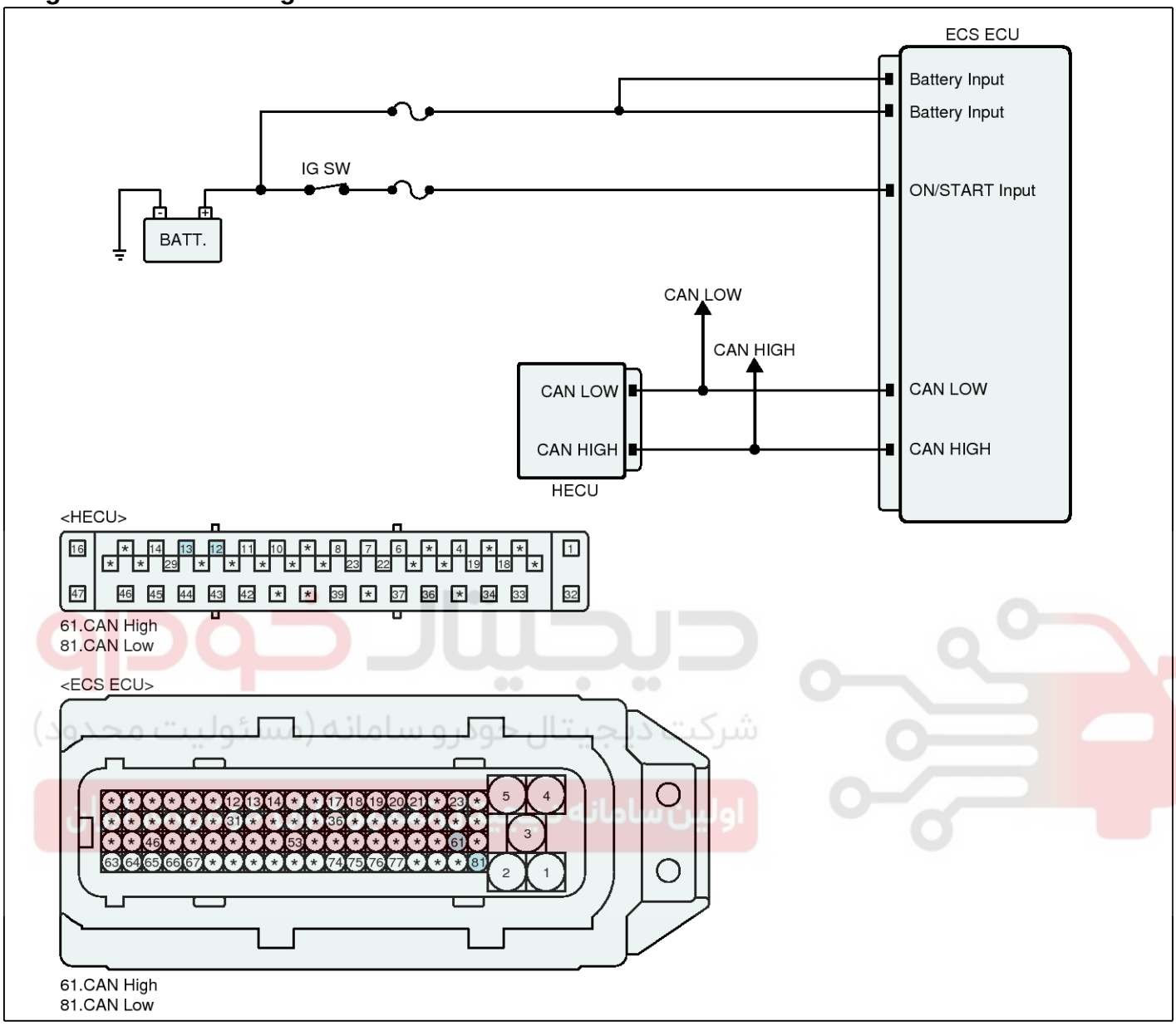

SBHSS9617L

Terminal and Connector Inspection

1. Many malfunctions in the electrical system are caused by poor harness(es) and terminal condition.

   Faults can also be caused by interference from other electrical systems, and mechanical or chemical damage.
2. Thoroughly check connectors for looseness, poor connection, bending, corrosion, contamination, deterioration, or damage.
3. Has a problem been found?

YES ▶ Repair as necessary and then go to "Verification of Vehicle Repair" procedure.

NO ▶ Go to "CAN Communication line Inspection" procedure.

CAN Communication line Inspection

■ Check CAN communication line

1. IG "OFF"
2. Disconnect HECU connector and ECS ECU connector.
3. Measure resistance between CAN-High terminal of HECU harness connector and CAN-High terminal of ECS ECU harness connector.
4. Measure resistance between CAN-Low terminal of HECU harness connector and CAN-Low terminal of ECS ECU harness connector.

Specification : Below approx. 1Ω

5. Is the measured value within specification?

YES ▶ Go to "Component Inspection" procedure.

NO ▶ Repair open in the CAN communication line between HECU and ECS ECU, go to "Verification of Vehicle Repair" procedure.

Component Inspection

1. IG "OFF"
2. IG "ON" & Engine "OFF"
3. After connecting scantool, Check DTC.
4. Using scantool, Clear DTC.
5. Again using scantool, Check DTC present.
6. Is the same DTC shown, agian?

YES ▶ Substitute with a known-good HECU and check for proper operation. If problem is corrected, replace HECU and then go to "Verification of Vehicle Repair" procedure.
※ In a case of replacing HECU, operate sensors' calibration by scantool, including the steering angle sensor's calibration.

NO ▶ Fault is intermittent caused by poor connection in HECU or ECS ECU's connector or was repaired and ECS ECU memory was not cleared.
▶ Repair or replace as necessary and then go to "Verification of Vehicle Repair" procedure.

Verification of Vehicle Repair

After a repair, it is essential to verify that the fault has been corrected.

1. Connect scantool and select "Diagnostic Trouble Codes(DTCs)" mode
2. Using a scantool, Clear DTC.
3. Operate the vehicle within DTC Detecting Condition in General Information.
4. Using a scantool, Check DTC present.
5. Are any DTCs present ?

YES ▶ Go to the applicable troubleshooting procedure.

NO ▶ System performing to specification at this time.

C1640 CAN Time-out Cluster

Component Location

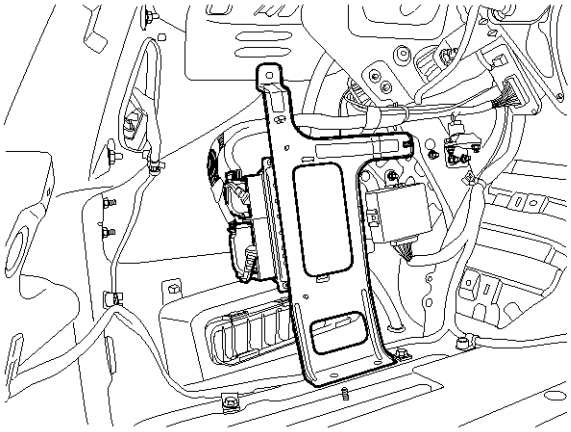

SBHSS8357D

General Description

The ECS is the abbreviation for "Electronic Control Suspension". This ECS system automatically controls the height of a vehicle level and the damping force of shock absorbers according to road condition. So it improves riding comfort and steering stability. For controlling a vehicle level and a damping force of vehicle damper, the ECS system needs various different signals from many sensors or other control modules. These signals are delivered to the ECS ECU through CAN communication line.

DTC Description

The ECS ECU checks CAN communication circuit for a normal operation and if the messages from cluster do not receive for a certain time, this DTC is set.

DTC Detecting Condition

Item		Detecting Condition	Possible cause
DTC Strategy		• Monitoring CAN messages	• An error in the CAN communication line • Faulty cluster ECU
Threshold value		• when the messages from cluster ECU don't get within a normal system voltage	
Fail-Safe	Airspring	• -	
	CDC damper	• Stopping the CDC damper's output (0 mA)	

Diagnostic Circuit Diagram

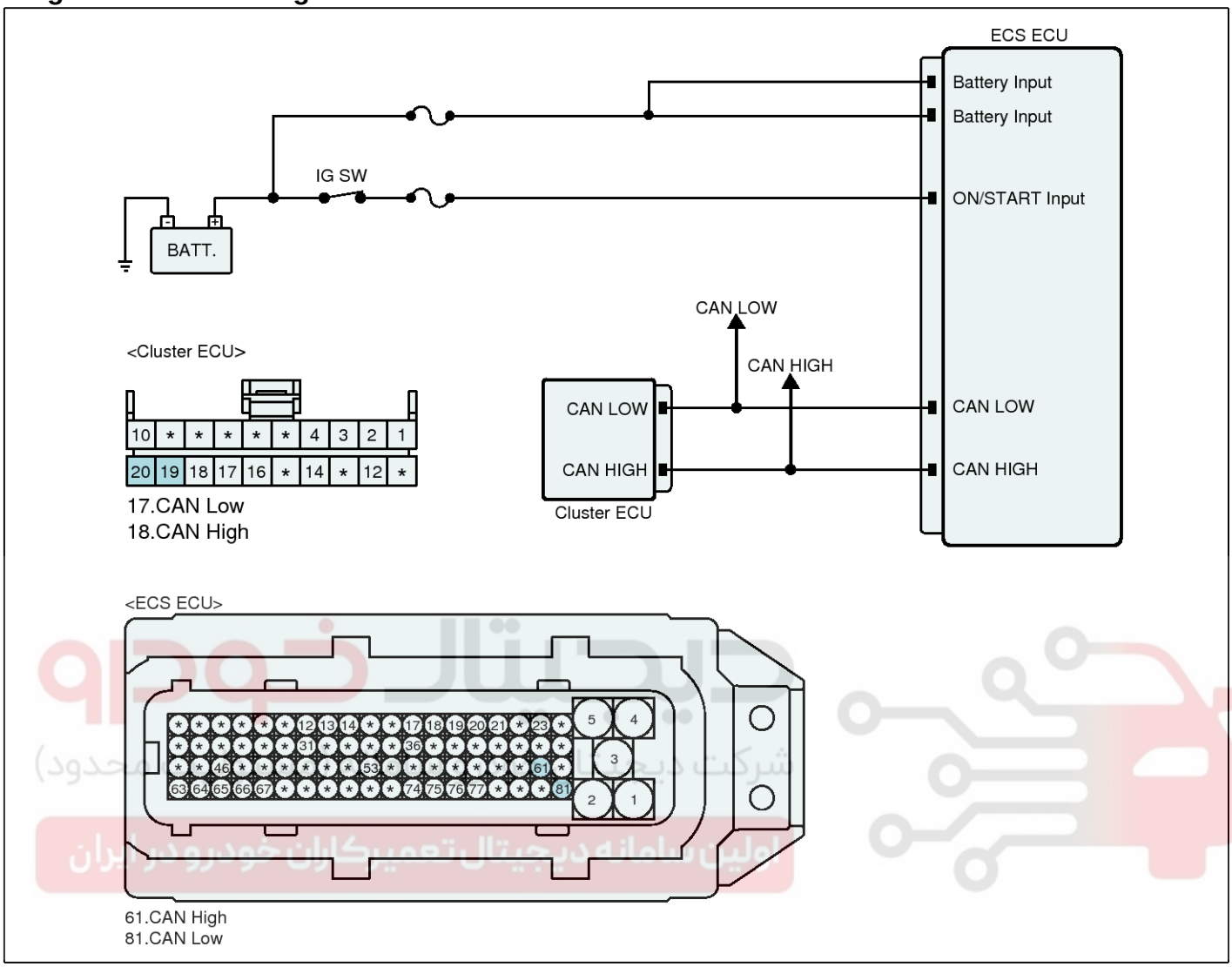

SBHSS9618L

Terminal and Connector Inspection

1. Many malfunctions in the electrical system are caused by poor harness(es) and terminal condition.

   Faults can also be caused by interference from other electrical systems, and mechanical or chemical damage.
2. Thoroughly check connectors for looseness, poor connection, bending, corrosion, contamination, deterioration, or damage.
3. Has a problem been found?

YES ▶ Repair as necessary and then go to "Verification of Vehicle Repair" procedure.

NO ▶ Go to "CAN Communication line Inspection" procedure.

CAN Communication line Inspection

■ Check CAN communication line

1. IG "OFF"
2. Disconnect cluster ECU connector and ECS ECU connector.
3. Measure resistance between CAN-High terminal of cluster ECU harness connector and CAN-High terminal of ECS ECU harness connector.
4. Measure resistance between CAN-Low terminal of cluster ECU harness connector and CAN-Low terminal of ECS ECU harness connector.

Specification : Below approx. 1Ω

5. Is the measured value within specification?

YES ▶ Go to "Component Inspection" procedure.

NO ▶ Repair open in the CAN communication line between cluster ECU and ECS ECU, go to "Verification of Vehicle Repair" procedure.

Component Inspection

1. IG "OFF"
2. IG "ON" & Engine "OFF"
3. After connecting scantool, Check DTC.
4. Using scantool, Clear DTC.
5. Again using scantool, Check DTC present.
6. Is the same DTC shown, agian?

YES ▶ Substitute with a known-good cluster ECU and check for proper operation. If problem is corrected, replace cluster ECU and then go to " Verification of Vehicle Repair" procedure.

NO ▶ Fault is intermittent caused by poor connection in cluster ECU or ECS ECU's connector or was repaired and ECS ECU memory was not cleared.
▶ Repair or replace as necessary and then go to "Verification of Vehicle Repair" procedure.

Verification of Vehicle Repair

After a repair, it is essential to verify that the fault has been corrected.

1. Connect scantool and select "Diagnostic Trouble Codes(DTCs)" mode
2. Using a scantool, Clear DTC.
3. Operate the vehicle within DTC Detecting Condition in General Information.
4. Using a scantool, Check DTC present.
5. Are any DTCs present ?

YES ▶ Go to the applicable troubleshooting procedure.

NO ▶ System performing to specification at this time.

C1641 CAN signal error ECM

Component Location

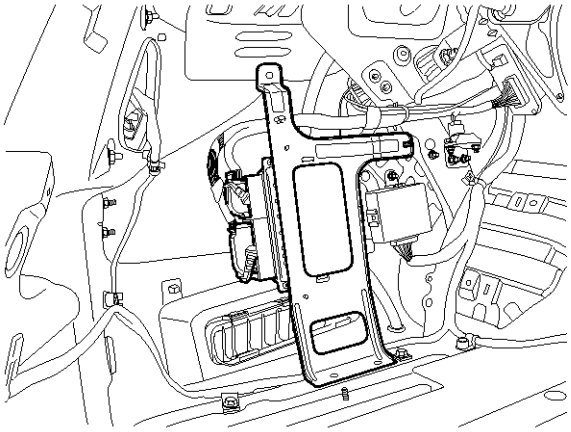

SBHSS8357D

General Description

The ECS is the abbreviation for "Electronic Control Suspension". This ECS system automatically controls the height of a vehicle level and the damping force of shock absorbers according to road condition. So it improves riding comfort and steering stability. For controlling a vehicle level and a damping force of vehicle damper, the ECS system needs various different signals from many sensors or other control modules. These signals are delivered to the ECS ECU through CAN communication line.

DTC Description

The ECS ECU monitors CAN messages for a normal operation and if the abnormal messages from ECM are detected, this DTC is set.

DTC Detecting Condition

Item		Detecting Condition	Possible cause
DTC Strategy		• Monitoring CAN messages	• A fault in the ECM side • Poor connection of CAN communication circuit
Threshold value		• when the abnomal messages are detected	
Fail-Safe	Airspring	• Adjusting a vehicle level to Normal level	
	CDC damper	• Stopping the CDC damper's output (0 mA)	

Diagnostic Circuit Diagram

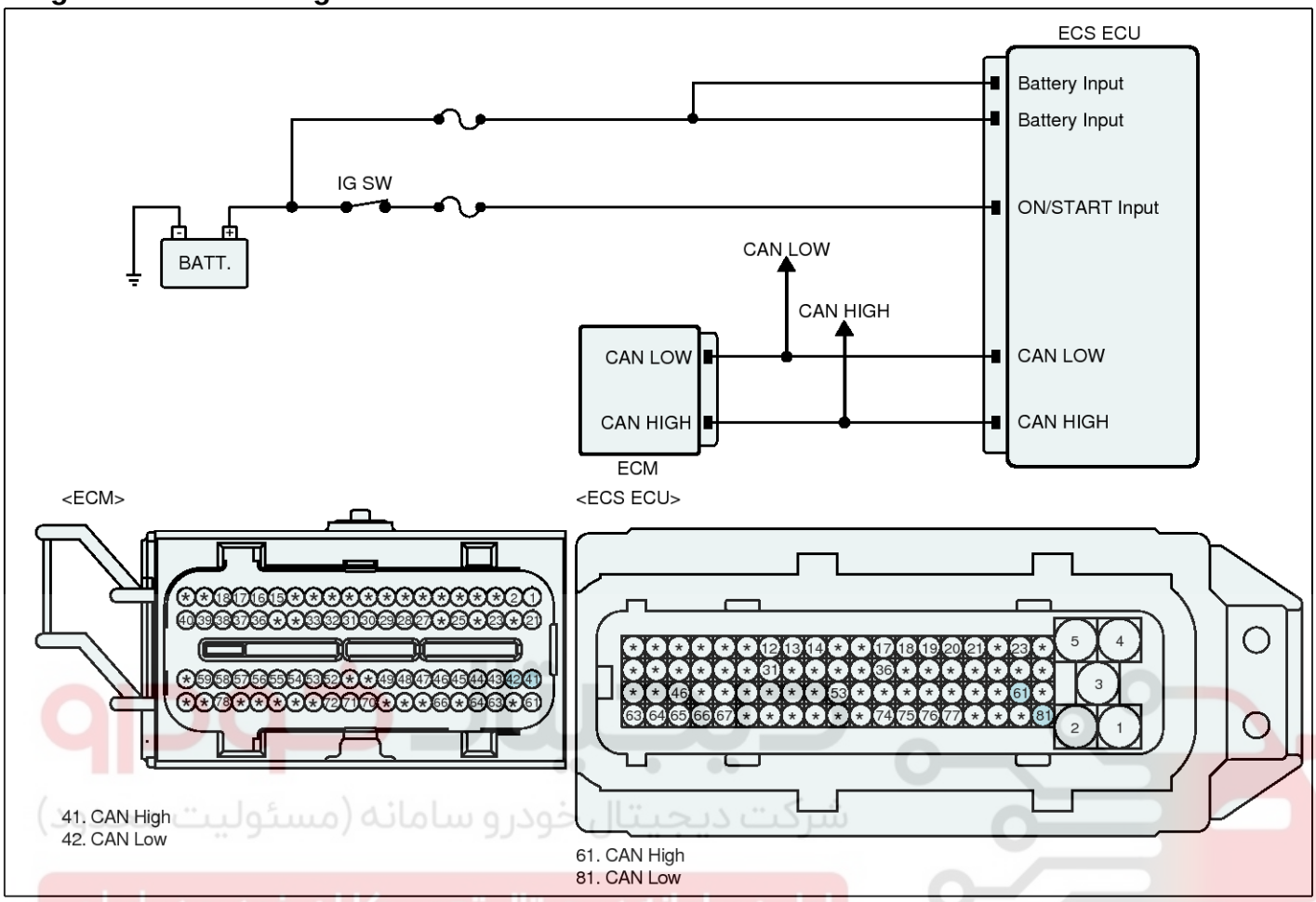

SBHSS9614L

Terminal and Connector Inspection

1. Many malfunctions in the electrical system are caused by poor harness(es) and terminal condition.

   Faults can also be caused by interference from other electrical systems, and mechanical or chemical damage.
2. Thoroughly check connectors for looseness, poor connection, bending, corrosion, contamination, deterioration, or damage.
3. Has a problem been found?

YES ▶ Repair as necessary and then go to "Verification of Vehicle Repair" procedure.

NO ▶ Go to "CAN Communication line Inspection" procedure.

CAN Communication line Inspection

■ Check CAN communication line

1. IG "OFF"
2. Disconnect ECM connector and ECS ECU connector.
3. Measure resistance between CAN-High terminal of ECM harness connector and CAN-High terminal of ECS ECU harness connector.
4. Measure resistance between CAN-Low terminal of ECM harness connector and CAN-Low terminal of ECS ECU harness connector.

Specification : Below approx. 1Ω

5. Is the measured value within specification?

YES ▶ Go to "Component Inspection" procedure.

NO ▶ Repair open in the CAN communication line between ECM and ECS ECU, go to "Verification of Vehicle Repair" procedure.

Component Inspection

1. IG "OFF"
2. IG "ON" & Engine "OFF"
3. After connecting scantool, Check DTC.
4. Using scantool, Clear DTC.
5. Again using scantool, Check DTC present.
6. Is the same DTC shown, agian?

YES ▶ If the signal from ECM has a problem, this DTC would be set. Check if there are faults in the engine management system. After solving the problems present, go to "Verification of Vehicle Repair" procedure.

NO ▶ Fault is intermittent caused by poor connection in ECM or ECS ECU's connector or was repaired and ECS ECU memory was not cleared.
▶ Repair or replace as necessary and then go to "Verification of Vehicle Repair" procedure.

Verification of Vehicle Repair

After a repair, it is essential to verify that the fault has been corrected.

1. Connect scantool and select "Diagnostic Trouble Codes(DTCs)" mode
2. Using a scantool, Clear DTC.
3. Operate the vehicle within DTC Detecting Condition in General Information.
4. Using a scantool, Check DTC present.
5. Are any DTCs present ?

YES ▶ Go to the applicable troubleshooting procedure.

NO ▶ System performing to specification at this time.

C1642 CAN signal error ESC(ESP)

Component Location

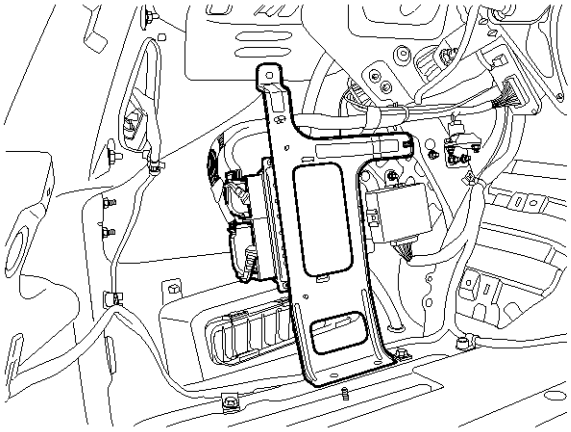

SBHSS8357D

General Description

The ECS is the abbreviation for "Electronic Control Suspension". This ECS system automatically controls the height of a vehicle level and the damping force of shock absorbers according to road condition. So it improves riding comfort and steering stability. For controlling a vehicle level and a damping force of vehicle damper, the ECS system needs various different signals from many sensors or other control modules. These signals are delivered to the ECS ECU through CAN communication line.

DTC Description

The ECS ECU monitors CAN messages for a normal operation and if the abnormal messages from HECU are detected, this DTC is set.

DTC Detecting Condition

Item		Detecting Condition	Possible cause
DTC Strategy		• Monitoring CAN messages	• A fault in the HECU side • Poor connection of CAN communication circuit
Threshold value		• when the abnomal messages are detected	
Fail-Safe	Airspring	• -	
	CDC damper	• Stopping the CDC damper's output (0 mA)	

Diagnostic Circuit Diagram

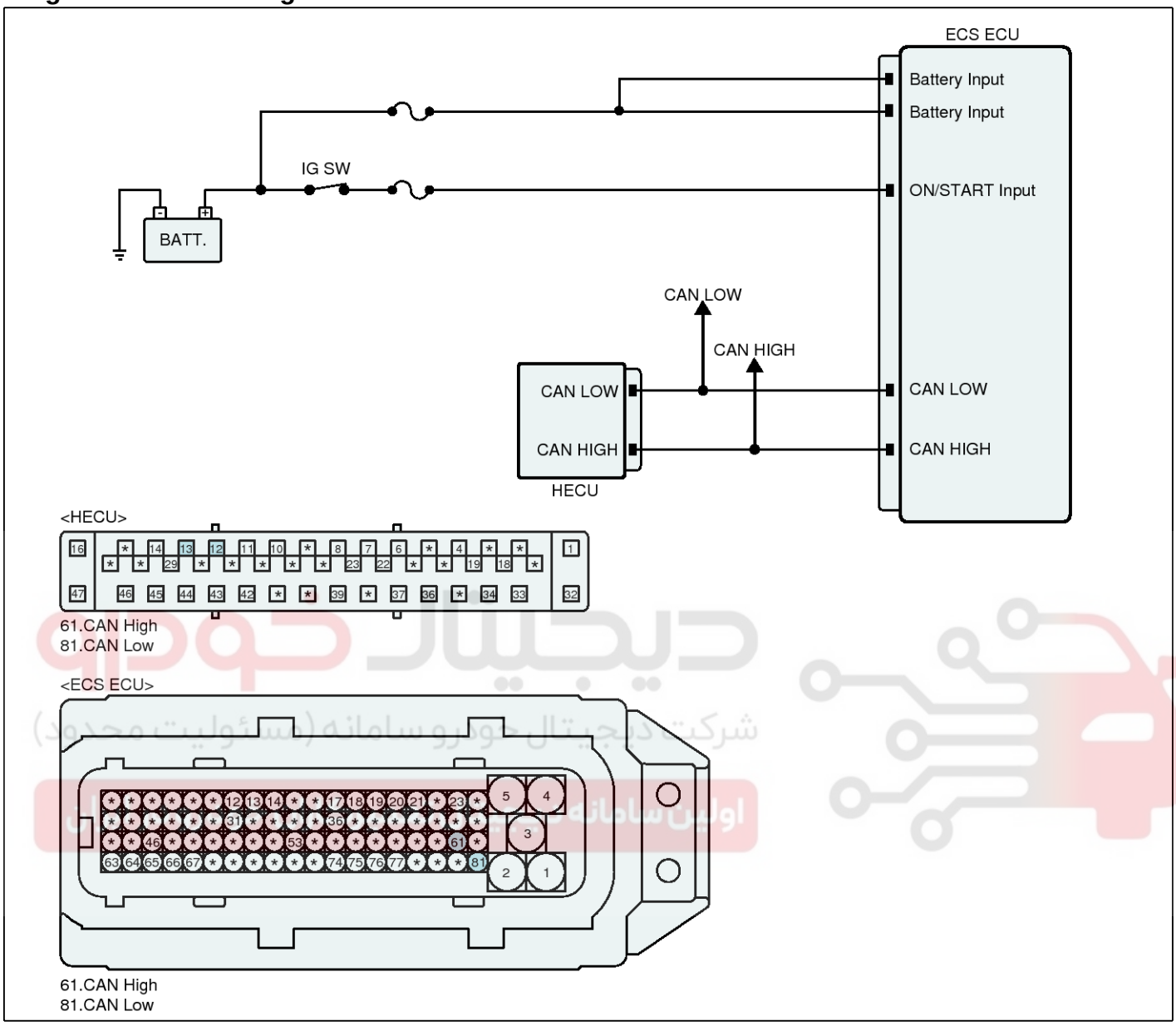

SBHSS9617L

Terminal and Connector Inspection

1. Many malfunctions in the electrical system are caused by poor harness(es) and terminal condition.

   Faults can also be caused by interference from other electrical systems, and mechanical or chemical damage.
2. Thoroughly check connectors for looseness, poor connection, bending, corrosion, contamination, deterioration, or damage.
3. Has a problem been found?

YES ▶ Repair as necessary and then go to "Verification of Vehicle Repair" procedure.

NO ▶ Go to "CAN Communication line Inspection" procedure.

CAN Communication line Inspection

■ Check CAN communication line

1. IG "OFF"
2. Disconnect HECU connector and ECS ECU connector.
3. Measure resistance between CAN-High terminal of HECU harness connector and CAN-High terminal of ECS ECU harness connector.
4. Measure resistance between CAN-Low terminal of HECU harness connector and CAN-Low terminal of ECS ECU harness connector.

Specification : Below approx. 1Ω

5. Is the measured value within specification?

YES ▶ Go to "Component Inspection" procedure.

NO ▶ Repair open in the CAN communication line between HECU and ECS ECU, go to "Verification of Vehicle Repair" procedure.

Component Inspection

1. IG "OFF"
2. IG "ON" & Engine "OFF"
3. After connecting scantool, Check DTC.
4. Using scantool, Clear DTC.
5. Again using scantool, Check DTC present.
6. Is the same DTC shown, agian?

YES ▶ If the signal from HECU has a problem, this DTC would be set. Check if there are faults in the brake management system. After solving the problems present, go to "Verification of Vehicle Repair" procedure.

NO ▶ Fault is intermittent caused by poor connection in HECU or ECS ECU's connector or was repaired and ECS ECU memory was not cleared.

▶ Repair or replace as necessary and then go to "Verification of Vehicle Repair" procedure.

Verification of Vehicle Repair

After a repair, it is essential to verify that the fault has been corrected.

1. Connect scantool and select "Diagnostic Trouble Codes(DTCs)" mode
2. Using a scantool, Clear DTC.
3. Operate the vehicle within DTC Detecting Condition in General Information.
4. Using a scantool, Check DTC present.
5. Are any DTCs present ?

YES ▶ Go to the applicable troubleshooting procedure.

NO ▶ System performing to specification at this time.

C1646 CAN Message Failure - TCU

Component Location

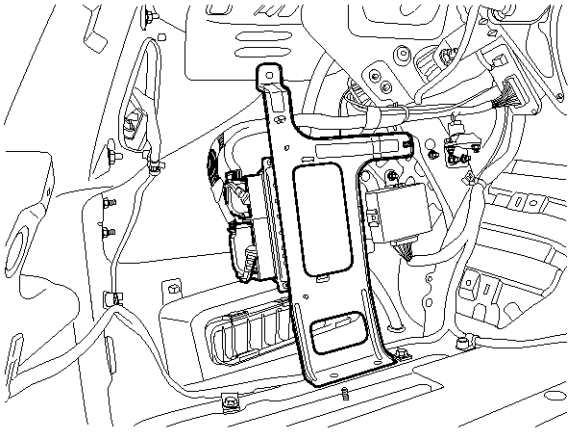

SBHSS8357D

General Description

The ECS is the abbreviation for "Electronic Control Suspension". This ECS system automatically controls the height of a vehicle level and the damping force of shock absorbers according to road condition. So it improves riding comfort and steering stability. For controlling a vehicle level and a damping force of vehicle damper, the ECS system needs various different signals from many sensors or other control modules. These signals are delivered to the ECS ECU through CAN communication line.

DTC Description

The ECS ECU monitors CAN messages for a normal operation and if the abnormal messages from TCM are detected, this DTC is set.

DTC Detecting Condition

Item		Detecting Condition	Possible cause
DTC Strategy		• Monitoring CAN messages	• A fault in the TCM side • Poor connection of CAN communication circuit
Threshold value		• when the abnomal messages are detected	
Fail-Safe	Airspring	• -	
	CDC damper	• -	

Diagnostic Circuit Diagram

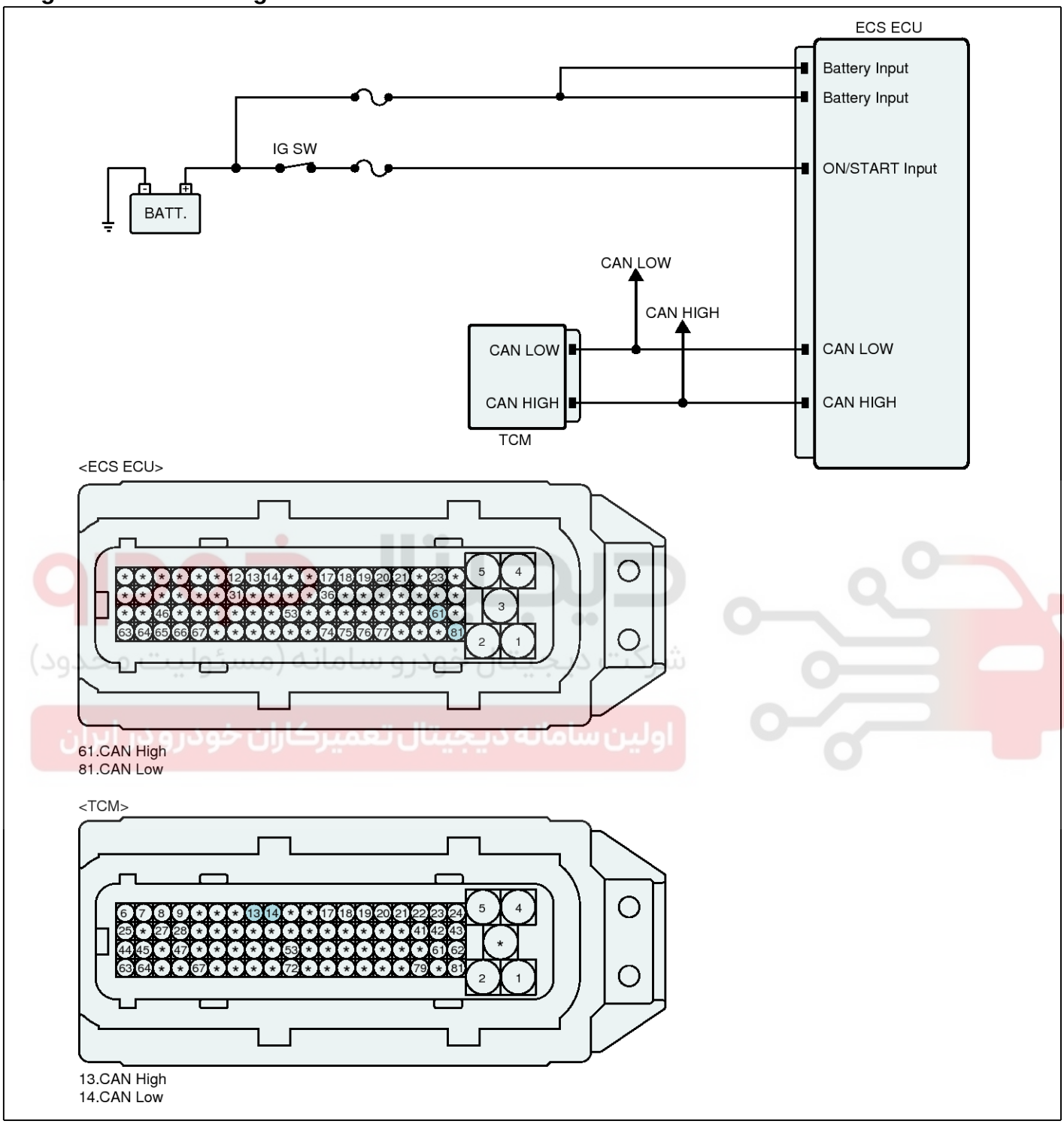

SBHSS9615L

Terminal and Connector Inspection

1. Many malfunctions in the electrical system are caused by poor harness(es) and terminal condition.

   Faults can also be caused by interference from other electrical systems, and mechanical or chemical damage.
2. Thoroughly check connectors for looseness, poor connection, bending, corrosion, contamination, deterioration, or damage.
3. Has a problem been found?

YES ▶ Repair as necessary and then go to "Verification of Vehicle Repair" procedure.

NO ▶ Go to "CAN Communication line Inspection" procedure.

CAN Communication line Inspection

■ Check CAN communication line

1. IG "OFF"
2. Disconnect TCM connector and ECS ECU connector.
3. Measure resistance between CAN-High terminal of TCM harness connector and CAN-High terminal of ECS ECU harness connector.
4. Measure resistance between CAN-Low terminal of TCM harness connector and CAN-Low terminal of ECS ECU harness connector.

Specification : Below approx. 1Ω

5. Is the measured value within specification?

YES ▶ Go to "Component Inspection" procedure.

NO ▶ Repair open in the CAN communication line between TCM and ECS ECU, go to "Verification of Vehicle Repair" procedure.

Component Inspection

1. IG "OFF"
2. IG "ON" & Engine "OFF"
3. After connecting scantool, Check DTC.
4. Using scantool, Clear DTC.
5. Again using scantool, Check DTC present.
6. Is the same DTC shown, agian?

YES ▶ If the signal from TCM has a problem, this DTC would be set. Check if there are faults in the transmission management system. After solving the problems present, go to "Verification of Vehicle Repair" procedure.

NO ▶ Fault is intermittent caused by poor connection in TCM or ECS ECU's connector or was repaired and ECS ECU memory was not cleared.
▶ Repair or replace as necessary and then go to "Verification of Vehicle Repair" procedure.

Verification of Vehicle Repair

After a repair, it is essential to verify that the fault has been corrected.

1. Connect scantool and select "Diagnostic Trouble Codes(DTCs)" mode
2. Using a scantool, Clear DTC.
3. Operate the vehicle within DTC Detecting Condition in General Information.
4. Using a scantool, Check DTC present.
5. Are any DTCs present ?

YES ▶ Go to the applicable troubleshooting procedure.

NO ▶ System performing to specification at this time.

C1702 Variant Coding Error

Component Location

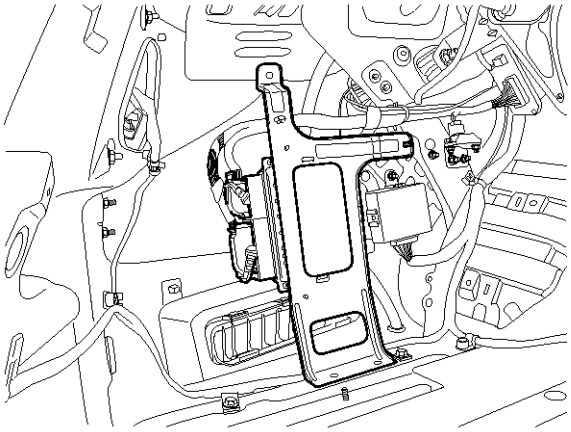

SBHSS8357D

General Description

The ECS is the abbreviation for "Electronic Control Suspension". This ECS system automatically controls the height of a vehicle level and the damping force of shock absorbers according to road condition. So it improves riding comfort and steering stability. There is no difference in the ECS ECU's hardware side according to a vehicle speficiation, but there is a difference in the its software side because the applied vehicle parameters differ according to a vehicle specification. The ECS ECU stores the variant code value in the ECU's memory based on the received data by CAN communication.

DTC Description

The ECS ECU checks variant code and if an inappropriate variant code or no variant code is detected, this DTC is set.

DTC Detecting Condition

Item		Detecting Condition	Possible cause
DTC Strategy		• Internal monitoring	• Variant coding not carried out
Threshold value		• when a variant code isn't entered in the ECS ECU	
Fail-Safe	Airspring	• Inhibition of controlling a vehicle level	
	CDC damper	• Stopping the CDC damper's output (0 mA)	

Variant coding

1. Connect scantool to Data Link Connector(DLC).
2. IG "ON"
3. Using scantool, Perform Variant coding program.
4. IG "OFF" and then, IG "ON", Perform Height sensor's Calibration program with scantool.(Fig.1)
5. IG "OFF" and then, IG "ON, Go to "Component Inspection" procedure.

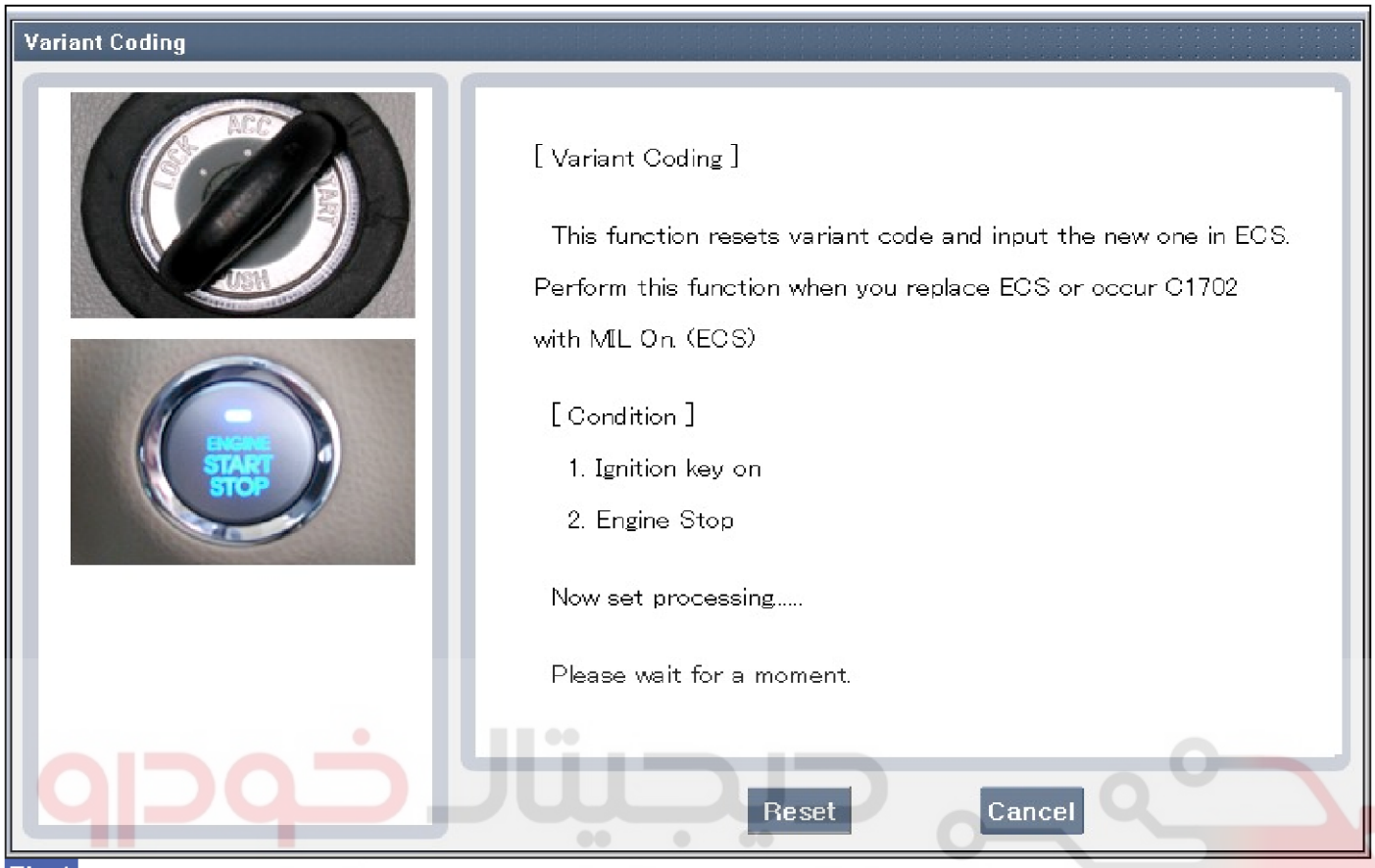

Fig.1

SBHSS9505L

Component Inspection

1. IG "OFF"
2. IG "ON" & Engine "OFF"
3. After connecting scantool, Check DTC.
4. Using scantool, Clear DTC.
5. Again using scantool, Check DTC present.
6. Is the same DTC shown, agian?

YES ▶ Substitute with a known-good ECS ECU and check for proper operation. If problem is corrected, replace ECS ECU and then go to "Verification of Vehicle Repair" procedure.
※ In a case of replacing ECS ECU, operate ECU Variant coding and height sensor's calibration by scantool

NO ▶ Fault is intermittent caused by poor connection in ECS ECU's connector or was repaired and ECS ECU memory was not cleared.
▶ Repair or replace as necessary and then go to "Verification of Vehicle Repair" procedure.

Verification of Vehicle Repair

After a repair, it is essential to verify that the fault has been corrected.

1. Connect scantool and select "Diagnostic Trouble Codes(DTCs)" mode
2. Using a scantool, Clear DTC.
3. Operate the vehicle within DTC Detecting Condition in General Information.
4. Using a scantool, Check DTC present.
5. Are any DTCs present ?

YES ▶ Go to the applicable troubleshooting procedure.

NO ▶ System performing to specification at this time.

C1706 A Vehicle Body Distortion

General Description

The ECS is the abbreviation for "Electronic Control Suspension". This ECS system automatically controls the height of a vehicle level and the damping force of shock absorbers according to road condition. So it improves riding comfort and steering stability. The vehicle level controlling is automatically performed according to a vehicle speed and a vehicle state. Also, it is possible to control a vehicle height controlling through a driver's switch signal.

DTC Description

The ECS ECU monitors each height sensor's signal and if it is detected as a vehicle body's distortion, this DTC is set.

DTC Detecting Condition

Item		Detecting Condition	Possible cause
DTC Strategy		• Monitoring height sensor's signal	• Bent bracket of height sensor • Wrong installation of height sensor
Threshold value		• when the deviation between the left side and the right side of the front-axle or the rear axle is over 20 mm	
Fail-Safe	Airspring	• -	
	CDC damper	• -	

Component Inspection

■ **Check effect by mechanical fault**

1. Check if the problem comes under faults below.
   - Wrong installation of vehicle height sensor
   - Bent bracket of vehicle height sensor
2. Is the possible problem detected?

YES ▶ Repair or replace as necessary and then go to "Verification of Vehicle Repair" procedure.

NO ▶ Fault is intermittent caused by poor connection in ECS ECU's connector or was repaired and ECS ECU memory was not cleared.
▶ Repair or replace as necessary and then go to "Verification of Vehicle Repair" procedure.

Verification of Vehicle Repair

After a repair, it is essential to verify that the fault has been corrected.

1. Connect scantool and select "Diagnostic Trouble Codes(DTCs)" mode
2. Using a scantool, Clear DTC.
3. Operate the vehicle within DTC Detecting Condition in General Information.
4. Using a scantool, Check DTC present.
5. Are any DTCs present ?

YES ▶ Go to the applicable troubleshooting procedure.

NO ▶ System performing to specification at this time.

C1707 A Vehicle Body Lopsidedness

Component Location

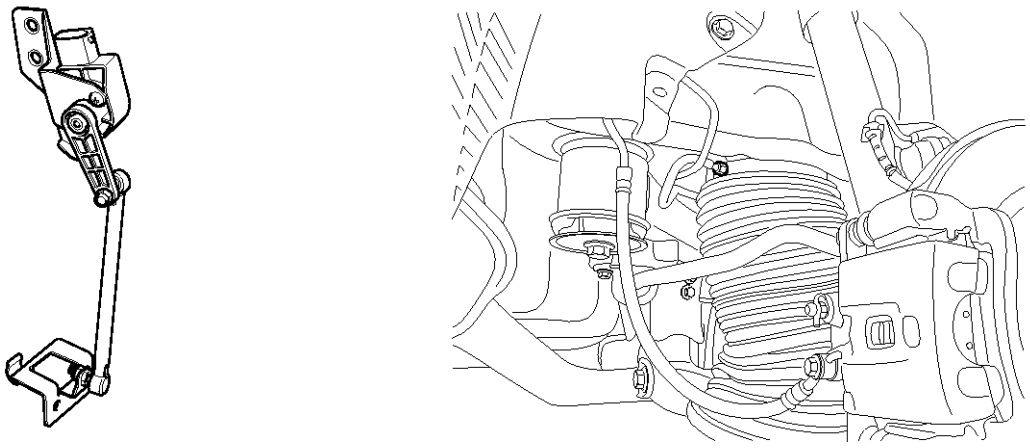

SBHSS8358D

General Description

The ECS is the abbreviation for "Electronic Control Suspension". This ECS system automatically controls the height of a vehicle level and the damping force of shock absorbers according to road condition. So it improves riding comfort and steering stability. The vehicle level controlling is automatically performed according to a vehicle speed and a vehicle state. Also, it is possible to control a vehicle height controlling through a driver's switch signal.

DTC Description

The ECS ECU monitors each height sensor's signal and if a vehicle leans to one side unusually, this DTC is set.

DTC Detecting Condition

Item		Detecting Condition	Possible cause
DTC Strategy		• Monitoring height sensor's signal	• Airspring Breakaway or Break-down • Air Leakager • Bent bracket of height sensor • Faulty height sensor
Threshold value		• when the difference between left side and right side is over the permissible value under driving at more than 1 0km/h	
Fail-Safe	Airspring	• Adjusting a vehicle level to Normal level	
	CDC damper	• -	

Component Inspection

■ Check effect by mechanical fault

1. Check if the problem comes under faults below.
   - Air leakage in the ECS system
   - Breakdown/brakeaway caused by airspring's bending
   - Air tube not connected
   - Bent bracket or faulty vehicle height sensor
2. Is the possible problem detected?

YES ▶ Repair or replace as necessary and then go to "Verification of Vehicle Repair" procedure.

NO ▶ Fault is intermittent caused by poor connection in ECS ECU's connector or was repaired and ECS ECU memory was not cleared.
▶ Repair or replace as necessary and then go to "Verification of Vehicle Repair" procedure.

Verification of Vehicle Repair

After a repair, it is essential to verify that the fault has been corrected.

1. Connect scantool and select "Diagnostic Trouble Codes(DTCs)" mode
2. Using a scantool, Clear DTC.
3. Operate the vehicle within DTC Detecting Condition in General Information.
4. Using a scantool, Check DTC present.
5. Are any DTCs present ?

YES ▶ Go to the applicable troubleshooting procedure.

NO ▶ System performing to specification at this time.

C1708 Level Control Disabled

General Description

The ECS is the abbreviation for "Electronic Control Suspension". This ECS system automatically controls the height of a vehicle level and the damping force of shock absorbers according to road condition. So it improves riding comfort and steering stability. The vehicle level controlling is automatically performed according to a vehicle speed and a vehicle state. Also, it is possible to control a vehicle height controlling through a driver's switch signal.

DTC Description

With a driver's selection, If the ECS ECU recognizes that the vehicle level controlling is done no longer, this DTC is set.And when a vehicle drives at more than 15 km/h, this DTC is automatically erased.

DTC Detecting Condition

Item		Detecting Condition	Possible cause
DTC Strategy		• Monitoring switch's signal	• Driver's function selection
Threshold value		• when the ECS EEPROM's value is set at 1 with below 1 5km/h	
Fail-Safe	Airspring	• -	
	CDC damper	• -	

C1709 Level Control Out of Range / Target Level not Applicable

General Description

The ECS is the abbreviation for "Electronic Control Suspension". This ECS system automatically controls the height of a vehicle level and the damping force of shock absorbers according to road condition. So it improves riding comfort and steering stability.

The vehicle level controlling is automatically performed according to a vehicle speed and a vehicle state. Also, it is possible to control a vehicle height controlling through a driver's switch signal.

DTC Description

If the vehicle leveling controlling is completed within a certain time, this DTC is set.

DTC Detecting Condition

Item		Detecting Condition	Possible cause
DTC Strategy		• Monitoring whether the leveling is accomplished or not	• Stuck height sensor • Faulty pressure sensor • Faulty compressor • Air leakage • Stuck solenoid valve • Temporary external influences
Threshold value		• when the time of upward or downward leveling is over 2 0 seconds	
Fail-Safe	Airspring	• Inhibition of controlling a vehicle level	
	CDC damper	• -	

Component Inspection

■ Check temporary exteranl influences

1. Check whether a vehicle leveling is accomplished or not.
2. Check if the problem comes under faults below.
   - The vehicle leveling control is being perfomed with the vehicle raised by a lift slightly.
   - During the downward leveling control, the vehicle is interrupted by an obstacle.
   - During the upward leveling control, the vehicle is interrupted by an obstacle.
   - The vehicle is overload.
3. Is the leveling control interrupted by an external cuase?

YES ▶ Erase an external influence detected and then go to "Verification of Vehicle Repair" procedure.

NO ▶ Go to "Check effect by mechanical fault" procedure.

■ Check effect by mechanical fault

1. Check if the problem comes under faults below.
   - Air leakage in the ECS system ; Check the leakage at each connecting part
   - Height sensor stuck
   - Compressor damaged or Reverse valve stuck/ damaged
   - Airspring valve stuck/ damaged (in the solenoid valve block)
2. Is the possible problem detected?

YES ▶ Repair or replace as necessary and then go to "Verification of Vehicle Repair" procedure.

NO ▶ Fault is intermittent caused by poor connection in ECS ECU's connector or was repaired and ECS ECU memory was not cleared.
▶ Repair or replace as necessary and then go to "Verification of Vehicle Repair" procedure.

Verification of Vehicle Repair

After a repair, it is essential to verify that the fault has been corrected.

1. Connect scantool and select "Diagnostic Trouble Codes(DTCs)" mode
2. Using a scantool, Clear DTC.
3. Operate the vehicle within DTC Detecting Condition in General Information.
4. Using a scantool, Check DTC present.
5. Are any DTCs present ?

YES ▶ Go to the applicable troubleshooting procedure.

NO ▶ System performing to specification at this time.

C1710 ALI Not Completed

Component Location

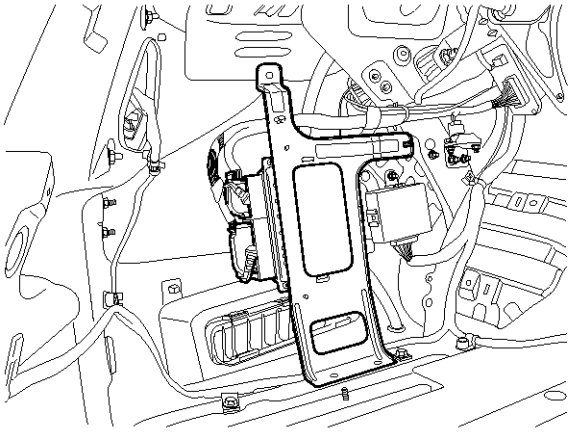

SBHSS8357D

General Description

The ECS is the abbreviation for "Electronic Control Suspension". This ECS system automatically controls the height of a vehicle level and the damping force of shock absorbers according to road condition. So it improves riding comfort and steering stability. The vehicle level controlling is automatically performed according to a vehicle speed and a vehicle state. Also, it is possible to control a vehicle height controlling through a driver's switch signal.

DTC Description

When the initialization procedure of the ECS system isn't completed, this DTC is set.

DTC Detecting Condition

Item		Detecting Condition	Possible cause
DTC Strategy		• Internal monitoring	• ECS initialization not completed
Threshold value		• when the initialization procedure of the ECS system isn't completed	
Fail-Safe	Airspring	• -	
	CDC damper	• -	

Monitor scantool data

1. Connect scantool to Data Link Connector(DLC).
2. IG "ON"
3. Perform "FINISH SERVICE MODE" program on the scantool.
4. IG "OFF" and the IG "ON", Go to "Verification of Vehicle Repair" procedure.

Component Inspection

1. IG "OFF"
2. IG "ON" & Engine "OFF"
3. After connecting scantool, Check DTC.
4. Using scantool, Clear DTC.
5. Again using scantool, Check DTC present.
6. Is the same DTC shown, agian?

YES ▶ Substitute with a known-good ECS ECU and check for proper operation. If problem is corrected, replace ECS ECU and then go to "Verification of Vehicle Repair" procedure.
※ In a case of replacing ECS ECU, operate ECU Variant coding and height sensor's calibration by scantool

NO ▶ Fault is intermittent caused by poor connection in ECS ECU's connector or was repaired and ECS ECU memory was not cleared.
▶ Repair or replace as necessary and then go to "Verification of Vehicle Repair" procedure.

Verification of Vehicle Repair

After a repair, it is essential to verify that the fault has been corrected.

1. Connect scantool and select "Diagnostic Trouble Codes(DTCs)" mode
2. Using a scantool, Clear DTC.
3. Operate the vehicle within DTC Detecting Condition in General Information.
4. Using a scantool, Check DTC present.
5. Are any DTCs present ?

YES ▶ Go to the applicable troubleshooting procedure.

NO ▶ System performing to specification at this time.

C2108 Compressor Relay

Component Location

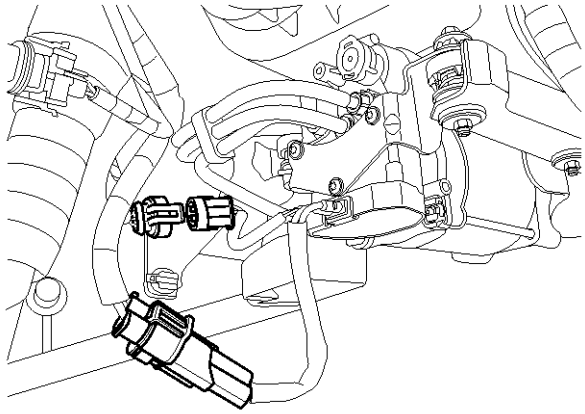

SBHSS8359D

General Description

The ECS is the abbreviation for "Electronic Control Suspension". This ECS system automatically controls the height of a vehicle level and the damping force of shock absorbers according to road condition. So it improves riding comfort and steering stability. When the vehicle leveling is performed, the compressor presses the air and makes it into high-pressure air. And it is supplied to each air-spring. For controlling the compressor, the ECS ECU controls the compressor relay and this relay supplies power to the compressor.

DTC Description

The ECS ECU monitors the compressor relay for a normal operation and if it is detected as a fault in the compressor relay, this DTC is set.

DTC Detecting Condition

Item		Detecting Condition	Possible cause
DTC Strategy		• Monitoring compressor relay	• Open or short in the compressor relay circuit • Faulty compressor relay
Threshold value		• Short to battery side: When the compressor is ON, the battery voltage is detected at the Low side • Short to ground side/ open: When the compressor is OFF, the zero voltage is detected at the Low side.	
Fail-Safe	Airspring	• Inhibition of the upward leveling, the downward leveling available	
	CDC damper	• -	

Diagnostic Circuit Diagram

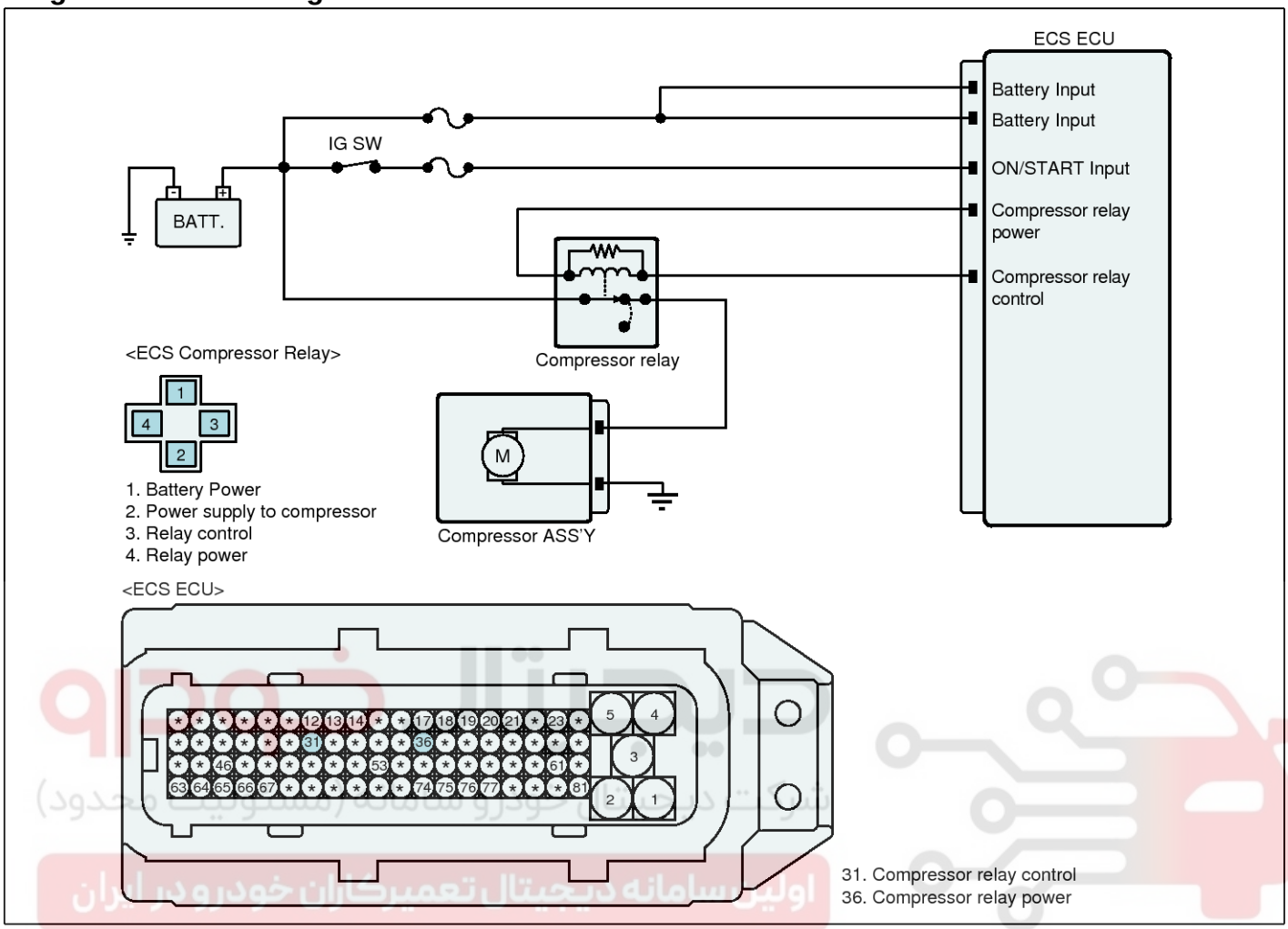

SBHSS9619L

Terminal and Connector Inspection

1. Many malfunctions in the electrical system are caused by poor harness(es) and terminal condition.

   Faults can also be caused by interference from other electrical systems, and mechanical or chemical damage.
2. Thoroughly check connectors for looseness, poor connection, bending, corrosion, contamination, deterioration, or damage.
3. Has a problem been found?

YES ▶ Repair as necessary and then go to "Verification of Vehicle Repair" procedure.

NO ▶ Go to "Power Circuit Inspection" procedure.

Power Circuit Inspection

■ Check for open or short

1. IG "OFF"
2. Disconnect compressor relay.
3. IG "ON"
4. Measure voltage between power terminal of the compressor relay harness connector and chassis ground.

Specification : Battery voltage

5. Is the measured value within specification?

YES ▶ Go to "Control Circuit Inspection" procedure.

NO ▶ Check fuses for open or blown.
▶ Repair open or short in power circuit between battery and compressor relay and then, go to "Verification of vehicle Repair" procedure.

Control Circuit Inspection

■ Check for open in harness

1. IG "OFF"
2. Disconnect compressor relay and ECS ECU connector.
3. Measure resistance between control terminal of the compressor relay harness connector and control terminal of the ECS ECU harness connector.

Specification : Below approx. 1Ω

4. Is the measured value within specification?

YES ▶ Go to "Check for short in harness" procedure.

NO ▶ Repair open in the control circuit between compressor relay and ECS ECU, go to "Verification of Vehicle Repair" procedure.

■ Check for short in harness

1. IG "OFF"
2. Disconnect compressor relay and ECS ECU connector.
3. Measure resistance between control terminal of the compressor relay harness connector and chassis ground.

Specification : Infinite

4. Is the measured value within specification?

YES ▶ Substitute with a known-good compressor relay and check for proper operation. If problem is corrected, replace compressor relay and then go to "Verification of Vehicle Repair" procedure.

NO ▶ Repair short in the control circuit between compressor relay and ECS ECU, go to "Verification of Vehicle Repair" procedure.

Verification of Vehicle Repair

After a repair, it is essential to verify that the fault has been corrected.

1. Connect scantool and select "Diagnostic Trouble Codes(DTCs)" mode
2. Using a scantool, Clear DTC.
3. Operate the vehicle within DTC Detecting Condition in General Information.
4. Using a scantool, Check DTC present.
5. Are any DTCs present ?

YES ▶ Go to the applicable troubleshooting procedure.

NO ▶ System performing to specification at this time.

C2203 CDC Actuator Failure - FL

Component Location

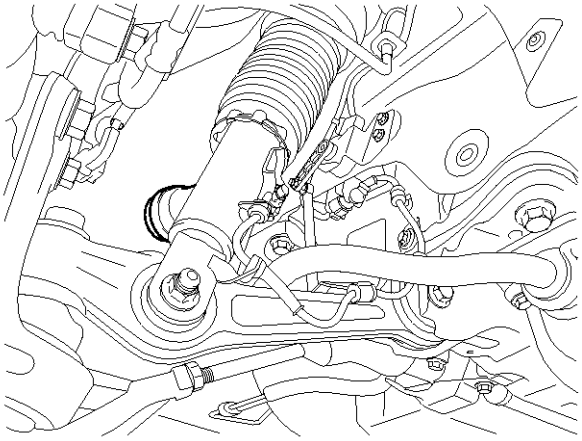

SBHSS8360D

General Description

The ECS is the abbreviation for "Electronic Control Suspension". This ECS system automatically controls the height of a vehicle level and the damping force of shock absorbers according to road condition. So it improves riding comfort and steering stability. Among components of the ECS system, the ECS damper is installed at the four-corner of the vehicle and controls the orifice of the shock absorber according to the road condition. That is, the ECS ECU receives various sensors' signals with driving and it estimates the current road condition and then, it controls a damping force of a shock absorber by a damper.

DTC Description

The ECS ECU checks the ECS damper for a normal operation and if it is detected as a open or short circuit, this DTC is set.

DTC Detecting Condition

Item		Detecting Condition	Possible cause
DTC Strategy		• Monitoring a ECS damper	• Open or short in the ECS damper circuit • Faulty ECS damper
Threshold value		• when the open or short circuit is detected in the ECS damper circuit	
Fail-Safe	Airspring	• -	
	CDC damper	• Stopping the CDC damper's output (0 mA)	

Diagnostic Circuit Diagram

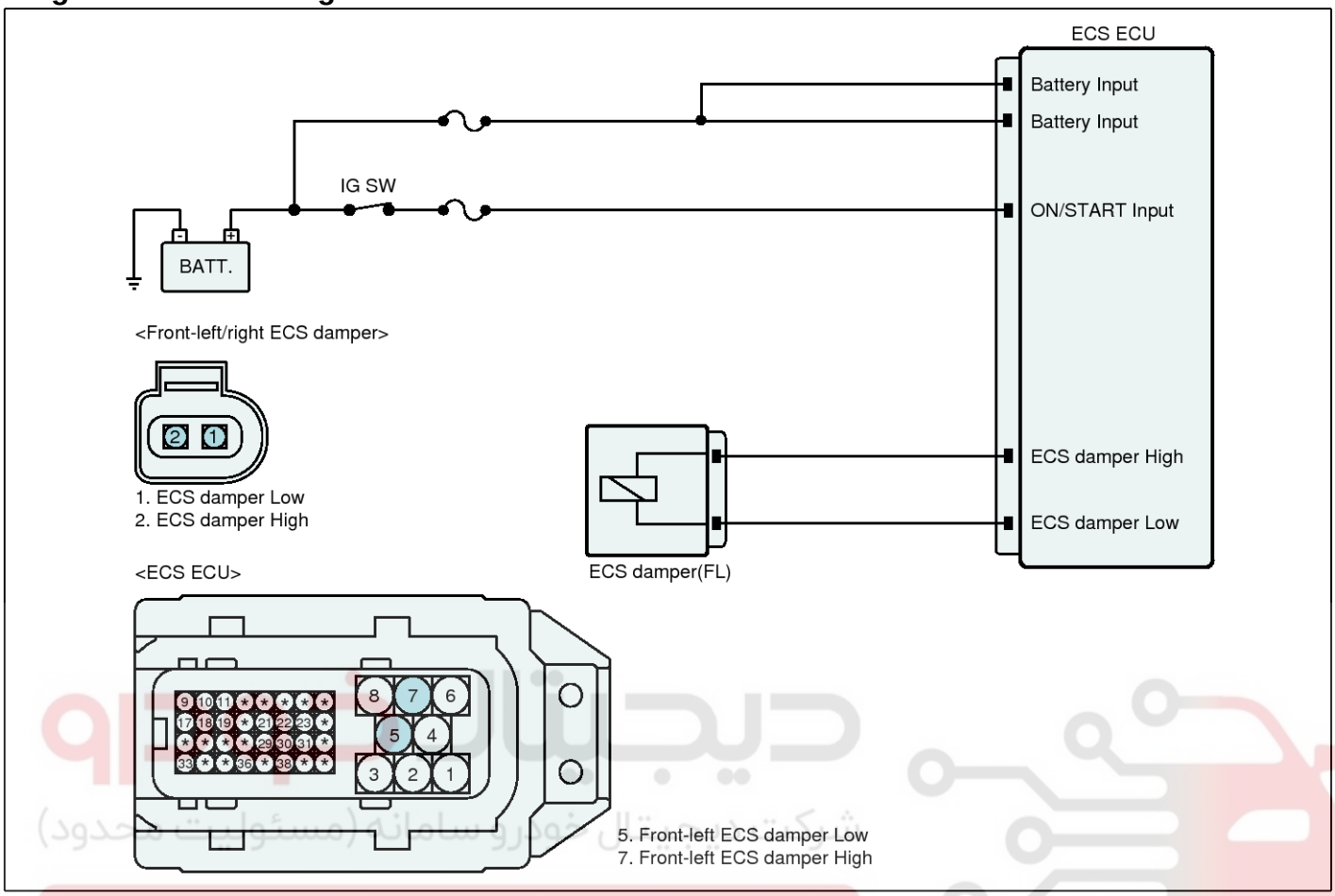

SBHSS9620L

Terminal and Connector Inspection

1. Many malfunctions in the electrical system are caused by poor harness(es) and terminal condition.

   Faults can also be caused by interference from other electrical systems, and mechanical or chemical damage.
2. Thoroughly check connectors for looseness, poor connection, bending, corrosion, contamination, deterioration, or damage.
3. Has a problem been found?

YES ▶ Repair as necessary and then go to "Verification of Vehicle Repair" procedure.

NO ▶ Go to "Power Circuit Inspection" procedure.

Power Circuit Inspection

■ Check for open in harness

1. IG "OFF"
2. Disconnect ECS damper connector and ECS ECU connector.
3. Measure resistance between High terminal of the ECS damper harness connector and High terminal of the ECS ECU harness connector.

Specification : Below approx. 1Ω

4. Is the measured value within specification?

YES ▶ Go to "Check for short in harness" procedure.

NO ▶ Repair open in power circuit between ECS ECU and ECS damper and then, go to "Verification of vehicle Repair" procedure.

■ Check for short in harness

1. IG "OFF"
2. Disconnect ECS damper connector and ECS ECU connector.
3. Measure resistance between High terminal of the ECS damper harness connector and chassis ground.

Specification : Infinite

4. Is the measured value within specification?

YES ▶ Go to "Control Circuit Inspection" procedure.

NO ▶ Repair short in power circuit between ECS ECU and ECS damper and then, go to "Verification of vehicle Repair" procedure.

Control Circuit Inspection

■ Check for open in harness

1. IG "OFF"
2. Disconnect ECS damper connector and ECS ECU connector.
3. Measure resistance between Low terminal of the ECS damper harness connector and Low terminal of the ECS ECU harness connector.

Specification : Below approx. 1Ω

4. Is the measured value within specification?

YES ▶ Go to "Check for short in harness" procedure.

NO ▶ Repair open in the control circuit between ECS damper and ECS ECU, go to "Verification of Vehicle Repair" procedure.

■ Check for short in harness

1. IG "OFF"
2. Disconnect ECS damper connector and ECS ECU connector.
3. Measure resistance between Low terminal of the ECS damper harness connector and chassis ground.

Specification : Infinite

4. Is the measured value within specification?

YES ▶ Substitute with a known-good ECS damper and check for proper operation. If problem is corrected, replace ECS damper and then go to " Verification of Vehicle Repair" procedure.

NO ▶ Repair short in the control circuit between ECS damper and ECS ECU, go to "Verification of Vehicle Repair" procedure.

Verification of Vehicle Repair

After a repair, it is essential to verify that the fault has been corrected.

1. Connect scantool and select "Diagnostic Trouble Codes(DTCs)" mode
2. Using a scantool, Clear DTC.
3. Operate the vehicle within DTC Detecting Condition in General Information.
4. Using a scantool, Check DTC present.
5. Are any DTCs present ?

YES ▶ Go to the applicable troubleshooting procedure.

NO ▶ System performing to specification at this time.

C2204 CDC Actuator Failure - FR

Component Location

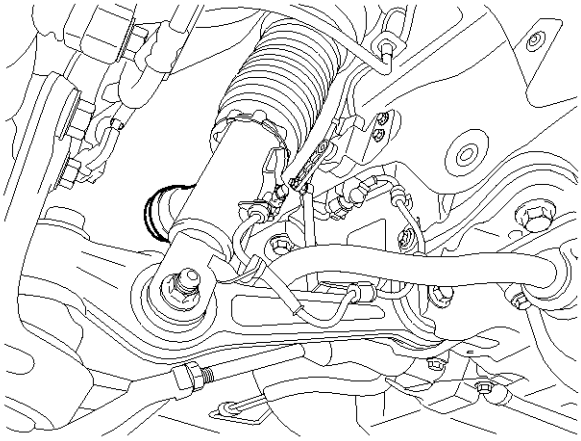

SBHSS8360D

General Description

The ECS is the abbreviation for "Electronic Control Suspension". This ECS system automatically controls the height of a vehicle level and the damping force of shock absorbers according to road condition. So it improves riding comfort and steering stability. Among components of the ECS system, the ECS damper is installed at the four-corner of the vehicle and controls the orifice of the shock absorber according to the road condition. That is, the ECS ECU receives various sensors' signals with driving and it estimates the current road condition and then, it controls a damping force of a shock absorber by a damper.

DTC Description

The ECS ECU checks the ECS damper for a normal operation and if it is detected as a open or short circuit, this DTC is set.

DTC Detecting Condition

Item		Detecting Condition	Possible cause
DTC Strategy		• Monitoring a ECS damper	• Open or short in the ECS damper circuit • Faulty ECS damper
Threshold value		• when the open or short circuit is detected in the ECS damper circuit	
Fail-Safe	Airspring	• -	
	CDC damper	• Stopping the CDC damper's output (0 mA)	

Diagnostic Circuit Diagram

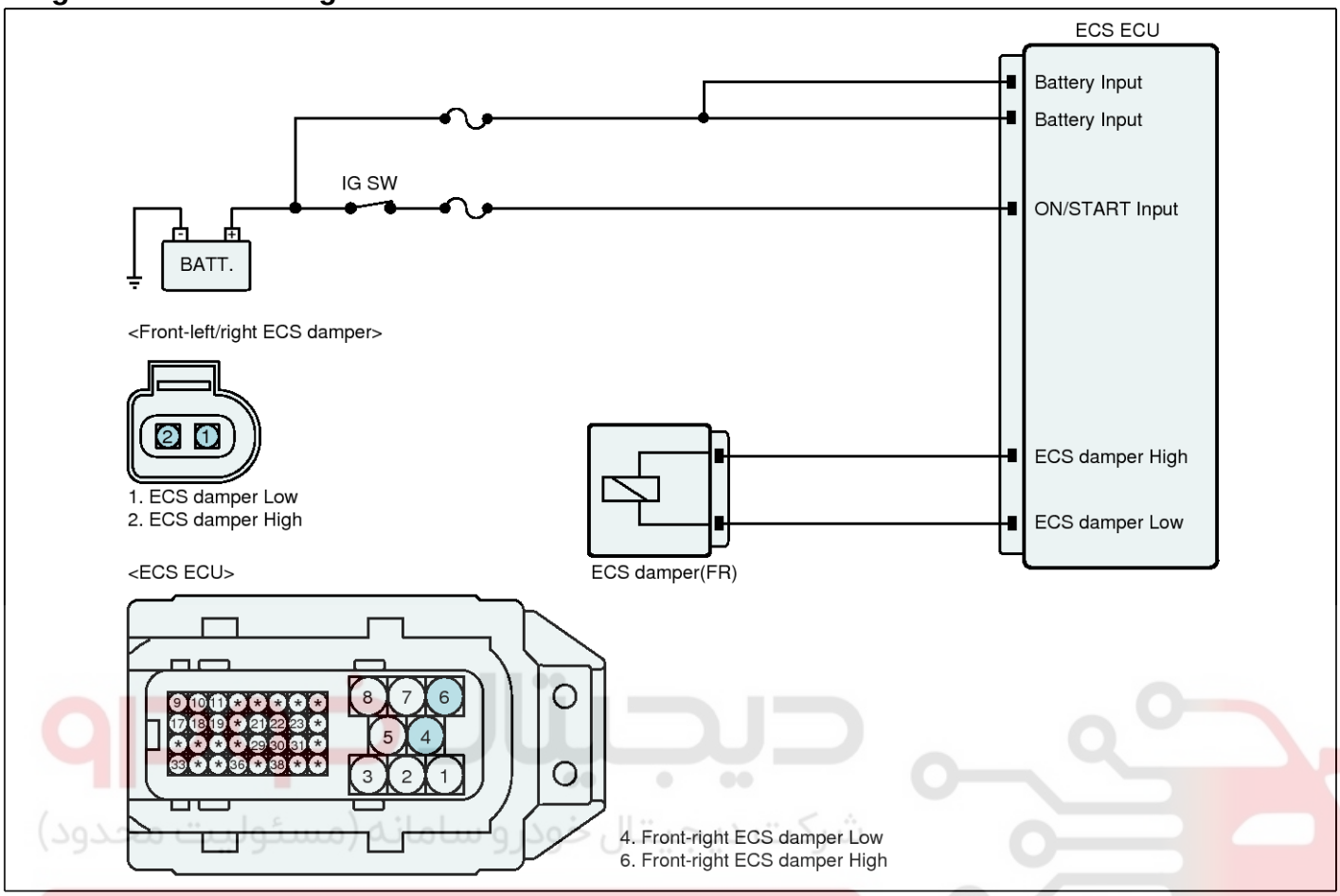

SBHSS9621L

Terminal and Connector Inspection

1. Many malfunctions in the electrical system are caused by poor harness(es) and terminal condition.

   Faults can also be caused by interference from other electrical systems, and mechanical or chemical damage.
2. Thoroughly check connectors for looseness, poor connection, bending, corrosion, contamination, deterioration, or damage.
3. Has a problem been found?

YES ▶ Repair as necessary and then go to "Verification of Vehicle Repair" procedure.

NO ▶ Go to "Power Circuit Inspection" procedure.

Power Circuit Inspection

■ Check for open in harness

1. IG "OFF"
2. Disconnect ECS damper connector and ECS ECU connector.
3. Measure resistance between High terminal of the ECS damper harness connector and High terminal of the ECS ECU harness connector.

Specification : Below approx. 1Ω

4. Is the measured value within specification?

YES ▶ Go to "Check for short in harness" procedure.

NO ▶ Repair open in power circuit between ECS ECU and ECS damper and then, go to "Verification of vehicle Repair" procedure.

■ Check for short in harness

1. IG "OFF"
2. Disconnect ECS damper connector and ECS ECU connector.
3. Measure resistance between High terminal of the ECS damper harness connector and chassis ground.

Specification : Infinite

4. Is the measured value within specification?

YES ▶ Go to "Control Circuit Inspection" procedure.

NO ▶ Repair short in power circuit between ECS ECU and ECS damper and then, go to "Verification of vehicle Repair" procedure.

Control Circuit Inspection

■ Check for open in harness

1. IG "OFF"
2. Disconnect ECS damper connector and ECS ECU connector.
3. Measure resistance between Low terminal of the ECS damper harness connector and Low terminal of the ECS ECU harness connector.

Specification : Below approx. 1Ω

4. Is the measured value within specification?

YES ▶ Go to "Check for short in harness" procedure.

NO ▶ Repair open in the control circuit between ECS damper and ECS ECU, go to "Verification of Vehicle Repair" procedure.

■ Check for short in harness

1. IG "OFF"
2. Disconnect ECS damper connector and ECS ECU connector.
3. Measure resistance between Low terminal of the ECS damper harness connector and chassis ground.

Specification : Infinite

4. Is the measured value within specification?

YES ▶ Substitute with a known-good ECS damper and check for proper operation. If problem is corrected, replace ECS damper and then go to " Verification of Vehicle Repair" procedure.

NO ▶ Repair short in the control circuit between ECS damper and ECS ECU, go to "Verification of Vehicle Repair" procedure.

Verification of Vehicle Repair

After a repair, it is essential to verify that the fault has been corrected.

1. Connect scantool and select "Diagnostic Trouble Codes(DTCs)" mode
2. Using a scantool, Clear DTC.
3. Operate the vehicle within DTC Detecting Condition in General Information.
4. Using a scantool, Check DTC present.
5. Are any DTCs present ?

YES ▶ Go to the applicable troubleshooting procedure.

NO ▶ System performing to specification at this time.

C2205 CDC Actuator Failure - RL

Component Location

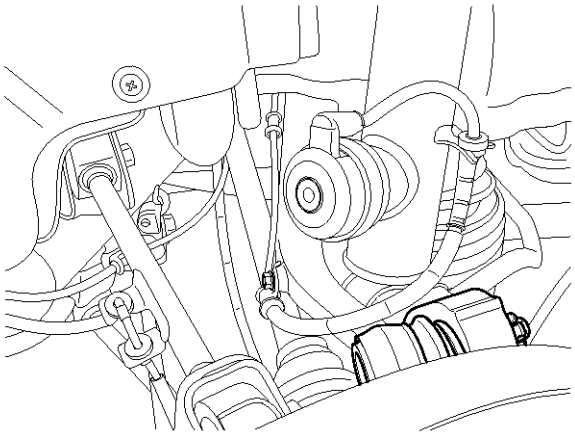

SBHSS8361D

General Description

The ECS is the abbreviation for "Electronic Control Suspension". This ECS system automatically controls the height of a vehicle level and the damping force of shock absorbers according to road condition. So it improves riding comfort and steering stability. Among components of the ECS system, the ECS damper is installed at the four-corner of the vehicle and controls the orifice of the shock absorber according to the road condition. That is, the ECS ECU receives various sensors' signals with driving and it estimates the current road condition and then, it controls a damping force of a shock absorber by a damper.

DTC Description

The ECS ECU checks the ECS damper for a normal operation and if it is detected as a open or short circuit, this DTC is set.

DTC Detecting Condition

Item		Detecting Condition	Possible cause
DTC Strategy		• Monitoring a ECS damper	• Open or short in the ECS damper circuit • Faulty ECS damper
Threshold value		• when the open or short circuit is detected in the ECS damper circuit	
Fail-Safe	Airspring	• -	
	CDC damper	• Stopping the CDC damper's output (0 mA)	

Diagnostic Circuit Diagram

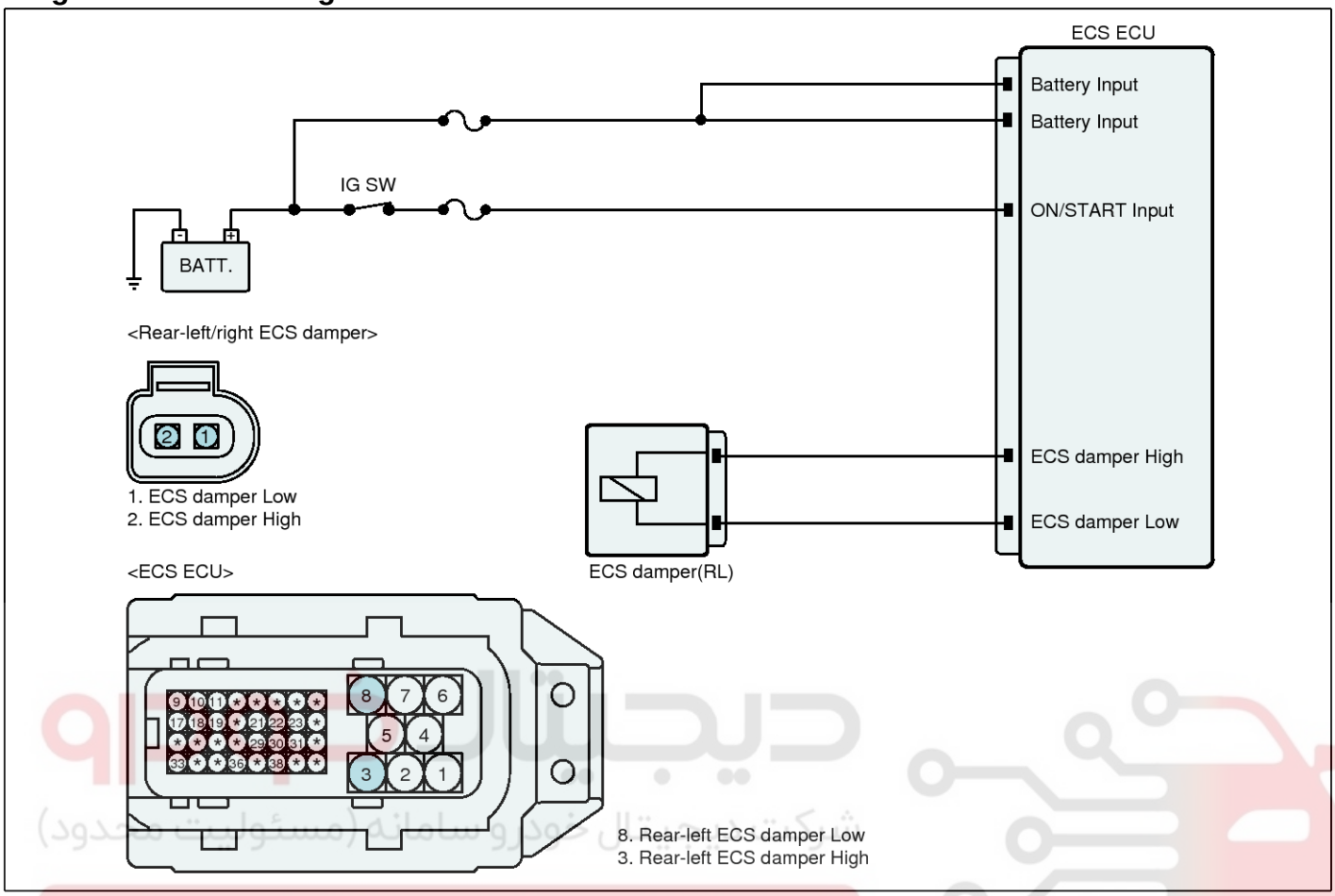

SBHSS9622L

Terminal and Connector Inspection

1. Many malfunctions in the electrical system are caused by poor harness(es) and terminal condition.

   Faults can also be caused by interference from other electrical systems, and mechanical or chemical damage.
2. Thoroughly check connectors for looseness, poor connection, bending, corrosion, contamination, deterioration, or damage.
3. Has a problem been found?

YES ▶ Repair as necessary and then go to "Verification of Vehicle Repair" procedure.

NO ▶ Go to "Power Circuit Inspection" procedure.

Power Circuit Inspection

■ Check for open in harness

1. IG "OFF"
2. Disconnect ECS damper connector and ECS ECU connector.
3. Measure resistance between High terminal of the ECS damper harness connector and High terminal of the ECS ECU harness connector.

Specification : Below approx. 1Ω

4. Is the measured value within specification?

YES ▶ Go to "Check for short in harness" procedure.

NO ▶ Repair open in power circuit between ECS ECU and ECS damper and then, go to "Verification of vehicle Repair" procedure.

■ Check for short in harness

1. IG "OFF"
2. Disconnect ECS damper connector and ECS ECU connector.
3. Measure resistance between High terminal of the ECS damper harness connector and chassis ground.

Specification : Infinite

4. Is the measured value within specification?

YES ▶ Go to "Control Circuit Inspection" procedure.

NO ▶ Repair short in power circuit between ECS ECU and ECS damper and then, go to "Verification of vehicle Repair" procedure.

Control Circuit Inspection

■ Check for open in harness

1. IG "OFF"
2. Disconnect ECS damper connector and ECS ECU connector.
3. Measure resistance between Low terminal of the ECS damper harness connector and Low terminal of the ECS ECU harness connector.

Specification : Below approx. 1Ω

4. Is the measured value within specification?

YES ▶ Go to "Check for short in harness" procedure.

NO ▶ Repair open in the control circuit between ECS damper and ECS ECU, go to "Verification of Vehicle Repair" procedure.

■ Check for short in harness

1. IG "OFF"
2. Disconnect ECS damper connector and ECS ECU connector.
3. Measure resistance between Low terminal of the ECS damper harness connector and chassis ground.

Specification : Infinite

4. Is the measured value within specification?

YES ▶ Substitute with a known-good ECS damper and check for proper operation. If problem is corrected, replace ECS damper and then go to " Verification of Vehicle Repair" procedure.

NO ▶ Repair short in the control circuit between ECS damper and ECS ECU, go to "Verification of Vehicle Repair" procedure.

Verification of Vehicle Repair

After a repair, it is essential to verify that the fault has been corrected.

1. Connect scantool and select "Diagnostic Trouble Codes(DTCs)" mode
2. Using a scantool, Clear DTC.
3. Operate the vehicle within DTC Detecting Condition in General Information.
4. Using a scantool, Check DTC present.
5. Are any DTCs present ?

YES ▶ Go to the applicable troubleshooting procedure.

NO ▶ System performing to specification at this time.

C2206 CDC Actuator Failure - RR

Component Location

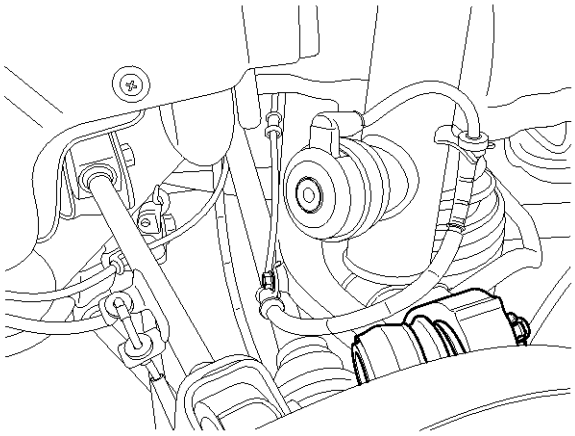

SBHSS8361D

General Description

The ECS is the abbreviation for "Electronic Control Suspension". This ECS system automatically controls the height of a vehicle level and the damping force of shock absorbers according to road condition. So it improves riding comfort and steering stability. Among components of the ECS system, the ECS damper is installed at the four-corner of the vehicle and controls the orifice of the shock absorber according to the road condition. That is, the ECS ECU receives various sensors' signals with driving and it estimates the current road condition and then, it controls a damping force of a shock absorber by a damper.

DTC Description

The ECS ECU checks the ECS damper for a normal operation and if it is detected as a open or short circuit, this DTC is set.

DTC Detecting Condition

Item		Detecting Condition	Possible cause
DTC Strategy		• Monitoring a ECS damper	• Open or short in the ECS damper circuit • Faulty ECS damper
Threshold value		• when the open or short circuit is detected in the ECS damper circuit	
Fail-Safe	Airspring	• -	
	CDC damper	• Stopping the CDC damper's output (0 mA)	

Diagnostic Circuit Diagram

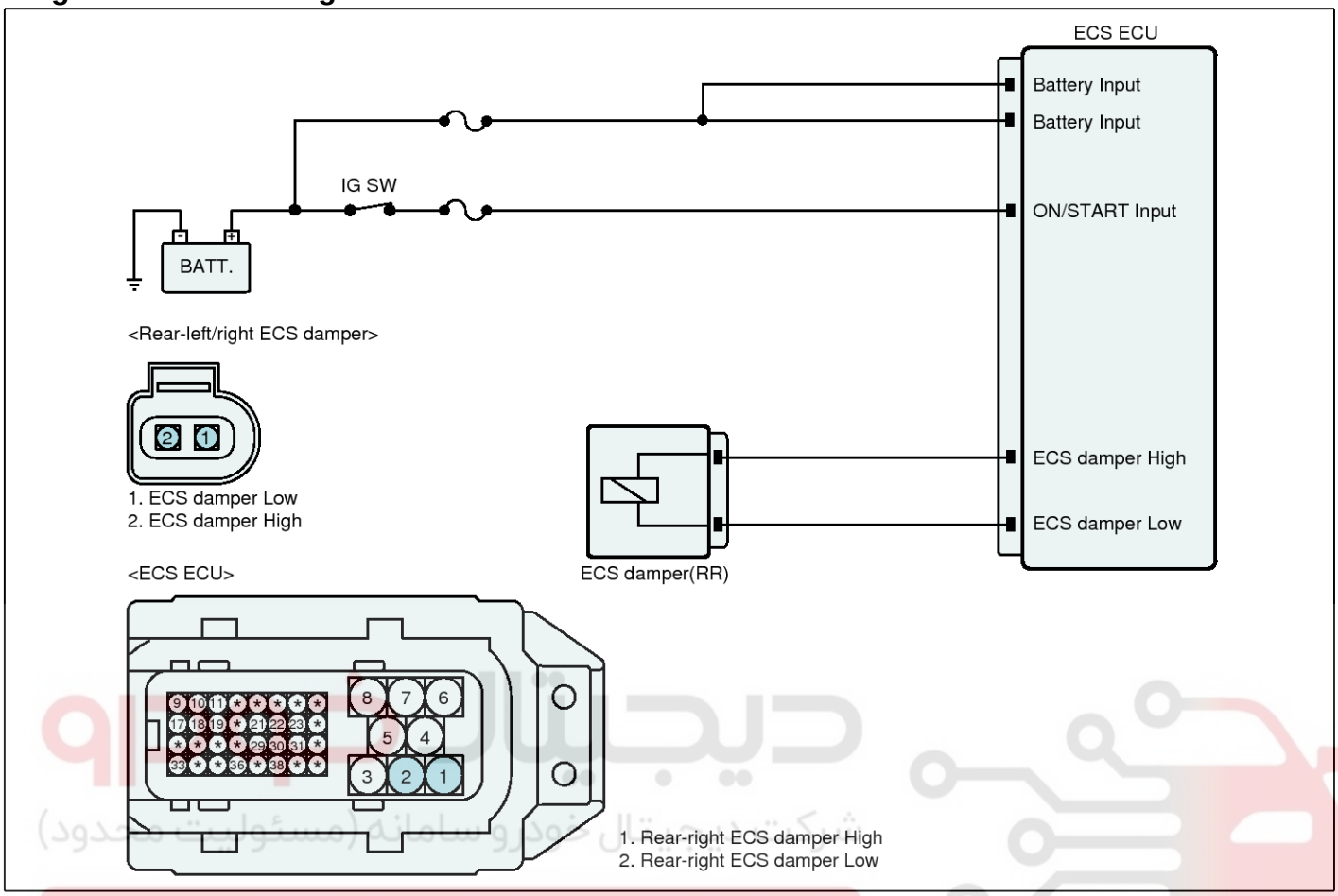

SBHSS9623L

Terminal and Connector Inspection

1. Many malfunctions in the electrical system are caused by poor harness(es) and terminal condition.

   Faults can also be caused by interference from other electrical systems, and mechanical or chemical damage.
2. Thoroughly check connectors for looseness, poor connection, bending, corrosion, contamination, deterioration, or damage.
3. Has a problem been found?

YES ▶ Repair as necessary and then go to "Verification of Vehicle Repair" procedure.

NO ▶ Go to "Power Circuit Inspection" procedure.

Power Circuit Inspection

■ Check for open in harness

1. IG "OFF"
2. Disconnect ECS damper connector and ECS ECU connector.
3. Measure resistance between High terminal of the ECS damper harness connector and High terminal of the ECS ECU harness connector.

Specification : Below approx. 1Ω

4. Is the measured value within specification?

YES ▶ Go to "Check for short in harness" procedure.

NO ▶ Repair open in power circuit between ECS ECU and ECS damper and then, go to "Verification of vehicle Repair" procedure.

■ Check for short in harness

1. IG "OFF"
2. Disconnect ECS damper connector and ECS ECU connector.
3. Measure resistance between High terminal of the ECS damper harness connector and chassis ground.

Specification : Infinite

4. Is the measured value within specification?

YES ▶ Go to "Control Circuit Inspection" procedure.

NO ▶ Repair short in power circuit between ECS ECU and ECS damper and then, go to "Verification of vehicle Repair" procedure.

Control Circuit Inspection

■ Check for open in harness

1. IG "OFF"
2. Disconnect ECS damper connector and ECS ECU connector.
3. Measure resistance between Low terminal of the ECS damper harness connector and Low terminal of the ECS ECU harness connector.

Specification : Below approx. 1Ω

4. Is the measured value within specification?

YES ▶ Go to "Check for short in harness" procedure.

NO ▶ Repair open in the control circuit between ECS damper and ECS ECU, go to "Verification of Vehicle Repair" procedure.

■ Check for short in harness

1. IG "OFF"
2. Disconnect ECS damper connector and ECS ECU connector.
3. Measure resistance between Low terminal of the ECS damper harness connector and chassis ground.

Specification : Infinite

4. Is the measured value within specification?

YES ▶ Substitute with a known-good ECS damper and check for proper operation. If problem is corrected, replace ECS damper and then go to " Verification of Vehicle Repair" procedure.

NO ▶ Repair short in the control circuit between ECS damper and ECS ECU, go to "Verification of Vehicle Repair" procedure.

Verification of Vehicle Repair

After a repair, it is essential to verify that the fault has been corrected.

1. Connect scantool and select "Diagnostic Trouble Codes(DTCs)" mode
2. Using a scantool, Clear DTC.
3. Operate the vehicle within DTC Detecting Condition in General Information.
4. Using a scantool, Check DTC present.
5. Are any DTCs present ?

YES ▶ Go to the applicable troubleshooting procedure.

NO ▶ System performing to specification at this time.

C2302 Air Spring Valve-FL Open/Short

Component Location

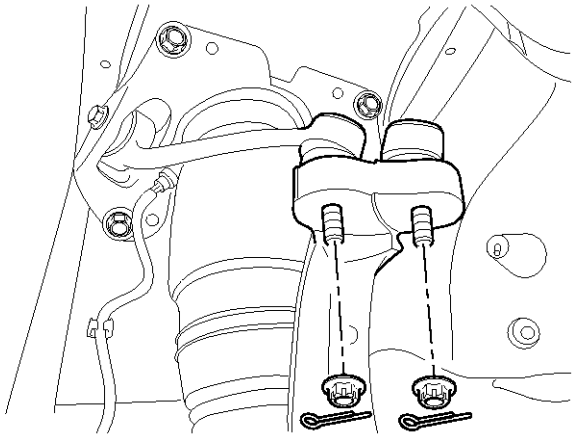

SBHSS8362D

General Description

The ECS is the abbreviation for "Electronic Control Suspension". This ECS system automatically controls the height of a vehicle level and the damping force of shock absorbers according to road condition. So it improves riding comfort and steering stability. When the vehicle leveling is performed, the compressor presses the air and makes it into high-pressure air. And it is supplied to each air-spring or the reservor. And the ECS ECU controls each air-spring valve in order to charge the air into each air-spring.

DTC Description

The ECS ECU checks a air-spring valve for a normal operation and if it is detected as a open or short circuit, this DTC is set.

DTC Detecting Condition

Item		Detecting Condition	Possible cause
DTC Strategy		• Monitoring a ECS damper	• Open or short in the air-spring valve circuit • Faulty air-spring valve(in the s-olenoid valve ASSAY)
Threshold value		• Short to battery side: When the valve is ON, the battery voltage is detected at the Low side • Short to ground side/ open: When the valve is OFF, the zero voltage is detected at the Low side	
Fail-Safe	Airspring	• Inhibition of the upward leveling	
	CDC damper	• -	

Diagnostic Circuit Diagram

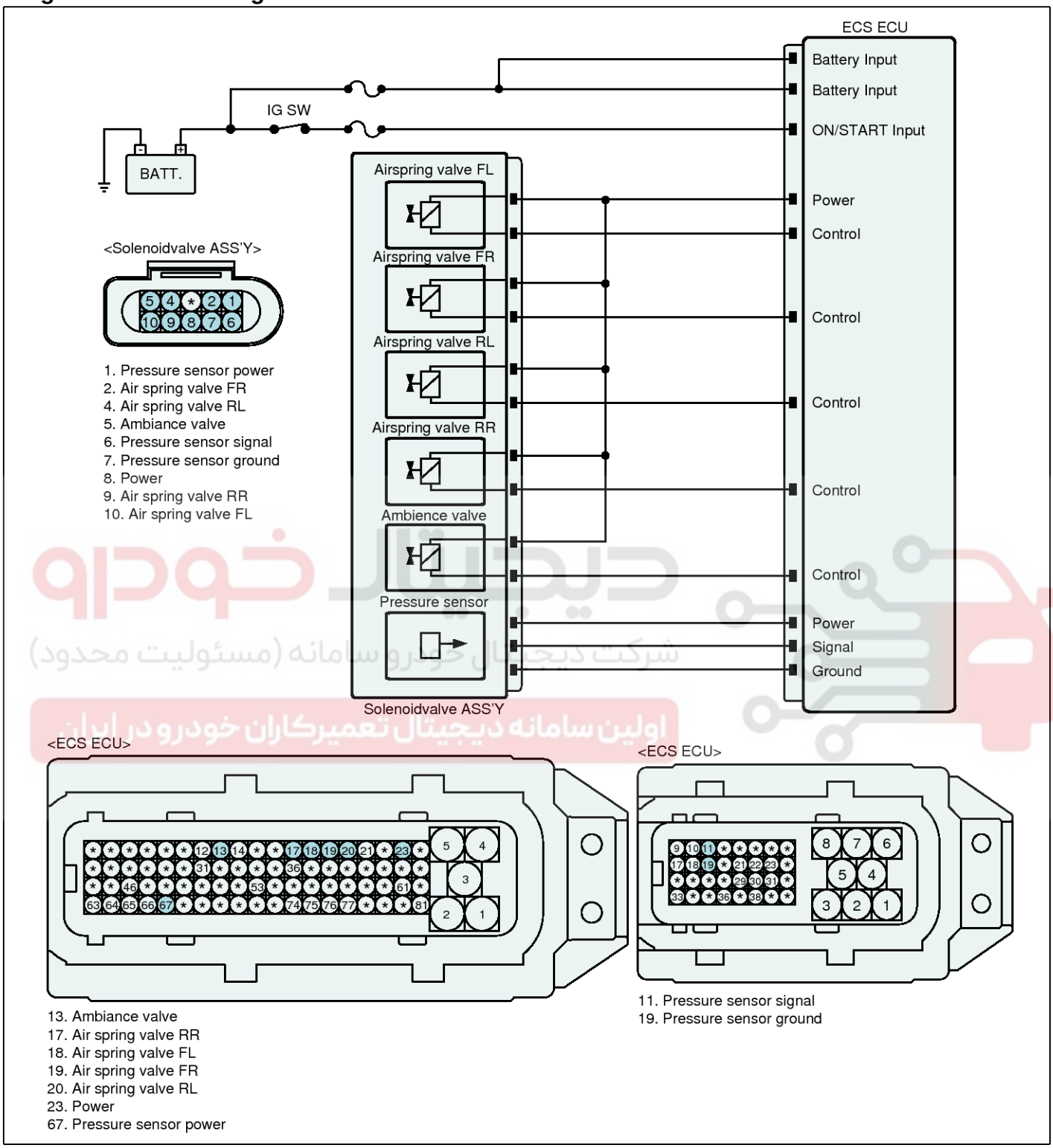

SBHSS9601L

Terminal and Connector Inspection

1. Many malfunctions in the electrical system are caused by poor harness(es) and terminal condition.

   Faults can also be caused by interference from other electrical systems, and mechanical or chemical damage.
2. Thoroughly check connectors for looseness, poor connection, bending, corrosion, contamination, deterioration, or damage.
3. Has a problem been found?

YES ▶ Repair as necessary and then go to "Verification of Vehicle Repair" procedure.

NO ▶ Go to "Power Circuit Inspection" procedure.

Power Circuit Inspection

■ Check for open in harness

1. IG "OFF"
2. Disconnect solenoid valve ASS'Y connector and ECS ECU connector.
3. Measure resistance between power terminal of the solenoid valve ASS'Y harness connector and power terminal of the ECS ECU harness connector.

Specification : Below approx. 1Ω

4. Is the measured value within specification?

YES ▶ Go to "Check for short in harness" procedure.

NO ▶ Repair open in power circuit between ECS ECU and solenoid valve ASS'Y and then, go to "Verification of vehicle Repair" procedure.

■ Check for short in harness

1. IG "OFF"
2. Disconnect solenoid valve ASS'Y connector and ECS ECU connector.
3. Measure resistance between power terminal of the solenoid valve ASS'Y harness connector and chassis ground.

Specification : Infinite

4. Is the measured value within specification?

YES ▶ Go to "Control Circuit Inspection" procedure.

NO ▶ Repair short in power circuit between ECS ECU and solenoid valve ASS'Y and then, go to "Verification of vehicle Repair" procedure.

Control Circuit Inspection

■ Check for open in harness

1. IG "OFF"
2. Disconnect solenoid valve ASS'Y connector and ECS ECU connector.
3. Measure resistance between control terminal of the solenoid valve ASS'Y harness connector and control terminal of the ECS ECU harness connector.

Specification : Below approx. 1Ω

4. Is the measured value within specification?

YES ▶ Go to "Check for short in harness" procedure.

NO ▶ Repair open in the control circuit between solenoid valve ASS'Y and ECS ECU, go to "Verification of Vehicle Repair" procedure.

■ Check for short in harness

1. IG "OFF"
2. Disconnect solenoid valve ASS'Y connector and ECS ECU connector.
3. Measure resistance between control terminal of the solenoid valve ASS'Y harness connector and chassis ground.

Specification : Infinite

4. Is the measured value within specification?

YES ▶ Substitute with a known-good solenoid valve ASS'Y and check for proper operation. If problem is corrected, replace solenoid valve ASS'Y and then go to "Verification of Vehicle Repair" procedure.

NO ▶ Repair short in the control circuit between solenoid valve ASS'Y and ECS ECU, go to "Verification of Vehicle Repair" procedure.

Verification of Vehicle Repair

After a repair, it is essential to verify that the fault has been corrected.

1. Connect scantool and select "Diagnostic Trouble Codes(DTCs)" mode
2. Using a scantool, Clear DTC.
3. Operate the vehicle within DTC Detecting Condition in General Information.
4. Using a scantool, Check DTC present.
5. Are any DTCs present ?

YES ▶ Go to the applicable troubleshooting procedure.

NO ▶ System performing to specification at this time.

C2303 Air Spring Valve-FR Open/Short

Component Location

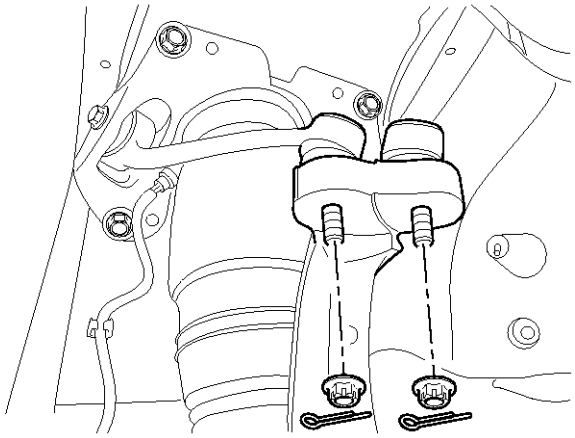

SBHSS8362D

General Description

The ECS is the abbreviation for "Electronic Control Suspension". This ECS system automatically controls the height of a vehicle level and the damping force of shock absorbers according to road condition. So it improves riding comfort and steering stability. When the vehicle leveling is performed, the compressor presses the air and makes it into high-pressure air. And it is supplied to each air-spring or the reservor. And the ECS ECU controls each air-spring valve in order to charge the air into each air-spring.

DTC Description

The ECS ECU checks a air-spring valve for a normal operation and if it is detected as a open or short circuit, this DTC is set.

DTC Detecting Condition

Item		Detecting Condition	Possible cause
DTC Strategy		• Monitoring a air-spring valve	• Open or short in the air-spring valve circuit • Faulty air-spring valve(in the s-olenoid valve ASSAY)
Threshold value		• Short to battery side: When the valve is ON, the battery voltage is detected at the Low side • Short to ground side/ open: When the valve is OFF, the zero voltage is detected at the Low side	
Fail-Safe	Airspring	• Inhibition of the upward leveling	
	CDC damper	• -	

Diagnostic Circuit Diagram

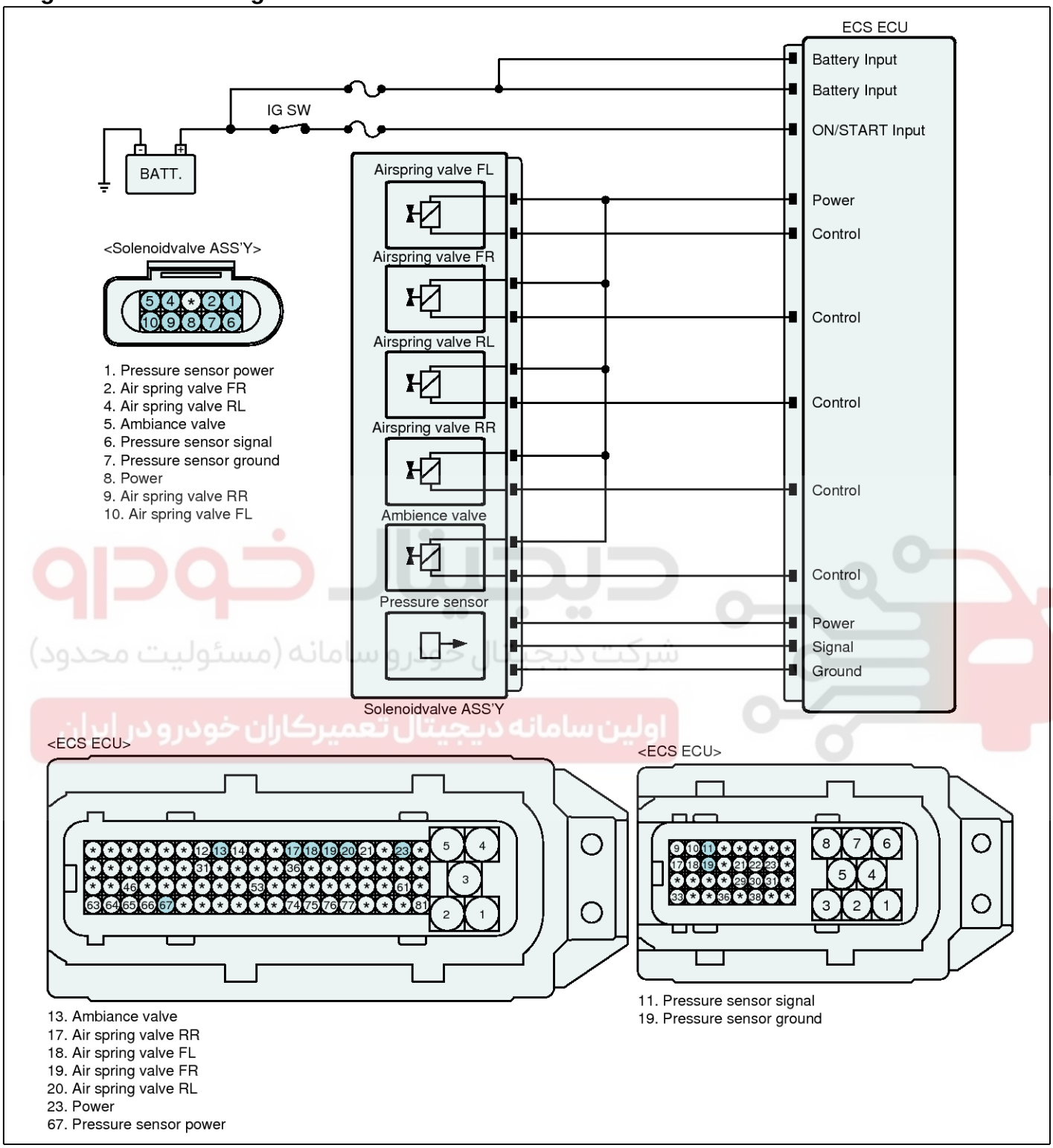

SBHSS9601L

Terminal and Connector Inspection

1. Many malfunctions in the electrical system are caused by poor harness(es) and terminal condition.

   Faults can also be caused by interference from other electrical systems, and mechanical or chemical damage.
2. Thoroughly check connectors for looseness, poor connection, bending, corrosion, contamination, deterioration, or damage.
3. Has a problem been found?

YES ▶ Repair as necessary and then go to "Verification of Vehicle Repair" procedure.

NO ▶ Go to "Power Circuit Inspection" procedure.

Power Circuit Inspection

■ Check for open in harness

1. IG "OFF"
2. Disconnect solenoid valve ASS'Y connector and ECS ECU connector.
3. Measure resistance between power terminal of the solenoid valve ASS'Y harness connector and power terminal of the ECS ECU harness connector.

Specification : Below approx. 1Ω

4. Is the measured value within specification?

YES ▶ Go to "Check for short in harness" procedure.

NO ▶ Repair open in power circuit between ECS ECU and solenoid valve ASS'Y and then, go to "Verification of vehicle Repair" procedure.

■ Check for short in harness

1. IG "OFF"
2. Disconnect solenoid valve ASS'Y connector and ECS ECU connector.
3. Measure resistance between power terminal of the solenoid valve ASS'Y harness connector and chassis ground.

Specification : Infinite

4. Is the measured value within specification?

YES ▶ Go to "Control Circuit Inspection" procedure.

NO ▶ Repair short in power circuit between ECS ECU and solenoid valve ASS'Y and then, go to "Verification of vehicle Repair" procedure.

Control Circuit Inspection

■ Check for open in harness

1. IG "OFF"
2. Disconnect solenoid valve ASS'Y connector and ECS ECU connector.
3. Measure resistance between control terminal of the solenoid valve ASS'Y harness connector and control terminal of the ECS ECU harness connector.

Specification : Below approx. 1Ω

4. Is the measured value within specification?

YES ▶ Go to "Check for short in harness" procedure.

NO ▶ Repair open in the control circuit between solenoid valve ASS'Y and ECS ECU, go to "Verification of Vehicle Repair" procedure.

■ Check for short in harness

1. IG "OFF"
2. Disconnect solenoid valve ASS'Y connector and ECS ECU connector.
3. Measure resistance between control terminal of the solenoid valve ASS'Y harness connector and chassis ground.

Specification : Infinite

4. Is the measured value within specification?

YES ▶ Substitute with a known-good solenoid valve ASS'Y and check for proper operation. If problem is corrected, replace solenoid valve ASS'Y and then go to "Verification of Vehicle Repair" procedure.

NO ▶ Repair short in the control circuit between solenoid valve ASS'Y and ECS ECU, go to "Verification of Vehicle Repair" procedure.

Verification of Vehicle Repair

After a repair, it is essential to verify that the fault has been corrected.

1. Connect scantool and select "Diagnostic Trouble Codes(DTCs)" mode
2. Using a scantool, Clear DTC.
3. Operate the vehicle within DTC Detecting Condition in General Information.
4. Using a scantool, Check DTC present.
5. Are any DTCs present ?

YES ▶ Go to the applicable troubleshooting procedure.

NO ▶ System performing to specification at this time.

C2306 Air Spring Valve-RL Open/Short

Component Location

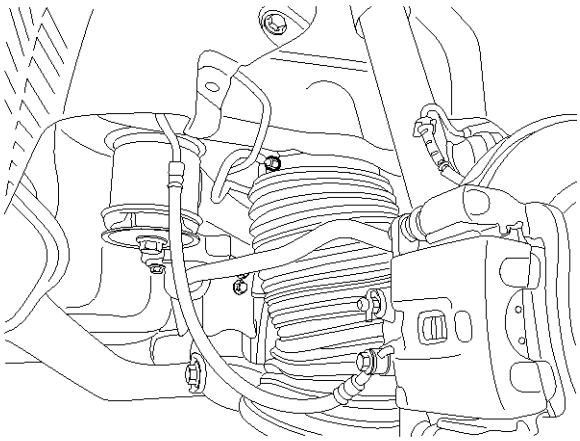

SBHSS8363D

General Description

The ECS is the abbreviation for "Electronic Control Suspension". This ECS system automatically controls the height of a vehicle level and the damping force of shock absorbers according to road condition. So it improves riding comfort and steering stability. When the vehicle leveling is performed, the compressor presses the air and makes it into high-pressure air. And it is supplied to each air-spring or the reservor. And the ECS ECU controls each air-spring valve in order to charge the air into each air-spring.

DTC Description

The ECS ECU checks a air-spring valve for a normal operation and if it is detected as a open or short circuit, this DTC is set.

DTC Detecting Condition

Item		Detecting Condition	Possible cause
DTC Strategy		• Monitoring a air-spring valve	• Open or short in the air-spring valve circuit • Faulty air-spring valve(in the s-olenoid valve ASSAY)
Threshold value		• Short to battery side: When the valve is ON, the battery voltage is detected at the Low side • Short to ground side/ open: When the valve is OFF, the zero voltage is detected at the Low side	
Fail-Safe	Airspring	• Inhibition of the upward leveling	
	CDC damper	• -	

Diagnostic Circuit Diagram

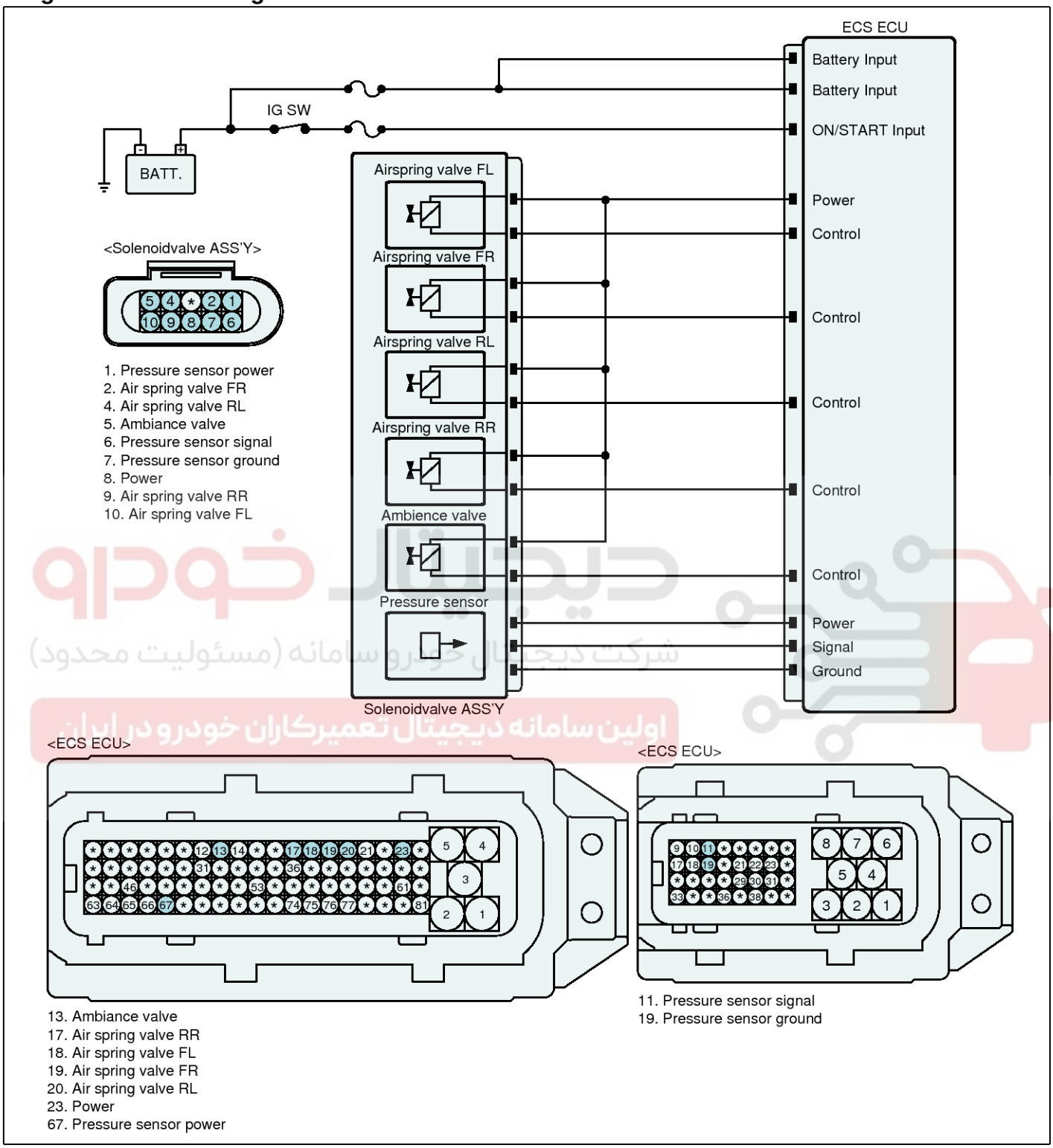

SBHSS9601L

Terminal and Connector Inspection

1. Many malfunctions in the electrical system are caused by poor harness(es) and terminal condition.

   Faults can also be caused by interference from other electrical systems, and mechanical or chemical damage.
2. Thoroughly check connectors for looseness, poor connection, bending, corrosion, contamination, deterioration, or damage.
3. Has a problem been found?

YES ▶ Repair as necessary and then go to "Verification of Vehicle Repair" procedure.

NO ▶ Go to "Power Circuit Inspection" procedure.

Power Circuit Inspection

■ Check for open in harness

1. IG "OFF"
2. Disconnect solenoid valve ASS'Y connector and ECS ECU connector.
3. Measure resistance between power terminal of the solenoid valve ASS'Y harness connector and power terminal of the ECS ECU harness connector.

Specification : Below approx. 1Ω

4. Is the measured value within specification?

YES ▶ Go to "Check for short in harness" procedure.

NO ▶ Repair open in power circuit between ECS ECU and solenoid valve ASS'Y and then, go to "Verification of vehicle Repair" procedure.

■ Check for short in harness

1. IG "OFF"
2. Disconnect solenoid valve ASS'Y connector and ECS ECU connector.
3. Measure resistance between power terminal of the solenoid valve ASS'Y harness connector and chassis ground.

Specification : Infinite

4. Is the measured value within specification?

YES ▶ Go to "Control Circuit Inspection" procedure.

NO ▶ Repair short in power circuit between ECS ECU and solenoid valve ASS'Y and then, go to "Verification of vehicle Repair" procedure.

Control Circuit Inspection

■ Check for open in harness

1. IG "OFF"
2. Disconnect solenoid valve ASS'Y connector and ECS ECU connector.
3. Measure resistance between control terminal of the solenoid valve ASS'Y harness connector and control terminal of the ECS ECU harness connector.

Specification : Below approx. 1Ω

4. Is the measured value within specification?

YES ▶ Go to "Check for short in harness" procedure.

NO ▶ Repair open in the control circuit between solenoid valve ASS'Y and ECS ECU, go to "Verification of Vehicle Repair" procedure.

■ Check for short in harness

1. IG "OFF"
2. Disconnect solenoid valve ASS'Y connector and ECS ECU connector.
3. Measure resistance between control terminal of the solenoid valve ASS'Y harness connector and chassis ground.

Specification : Infinite

4. Is the measured value within specification?

YES ▶ Substitute with a known-good solenoid valve ASS'Yand check for proper operation. If problem is corrected, replace solenoid valve ASS'Y and then go to "Verification of Vehicle Repair" procedure.

NO ▶ Repair short in the control circuit between solenoid valve ASS'Y and ECS ECU, go to "Verification of Vehicle Repair" procedure.

Verification of Vehicle Repair

After a repair, it is essential to verify that the fault has been corrected.

1. Connect scantool and select "Diagnostic Trouble Codes(DTCs)" mode
2. Using a scantool, Clear DTC.
3. Operate the vehicle within DTC Detecting Condition in General Information.
4. Using a scantool, Check DTC present.
5. Are any DTCs present ?

YES ▶ Go to the applicable troubleshooting procedure.

NO ▶ System performing to specification at this time.

C2307 Air Spring Valve-RR Open/Short

Component Location

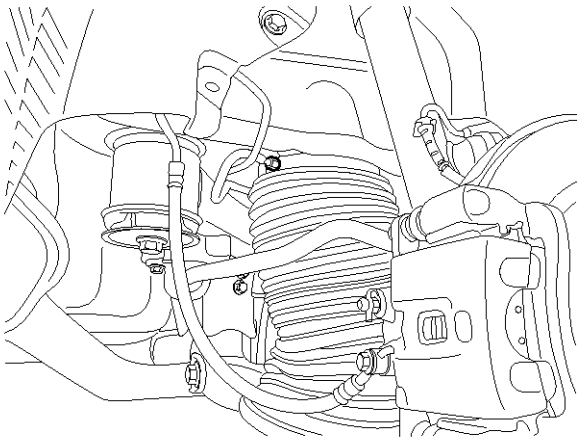

SBHSS8363D

General Description

The ECS is the abbreviation for "Electronic Control Suspension". This ECS system automatically controls the height of a vehicle level and the damping force of shock absorbers according to road condition. So it improves riding comfort and steering stability. When the vehicle leveling is performed, the compressor presses the air and makes it into high-pressure air. And it is supplied to each air-spring or the reservor. And the ECS ECU controls each air-spring valve in order to charge the air into each air-spring.

DTC Description

The ECS ECU checks a air-spring valve for a normal operation and if it is detected as a open or short circuit, this DTC is set.

DTC Detecting Condition

Item		Detecting Condition	Possible cause
DTC Strategy		• Monitoring a air-spring valve	• Open or short in the air-spring valve circuit • Faulty air-spring valve(in the s-olenoid valve ASSAY)
Threshold value		• Short to battery side: When the valve is ON, the battery voltage is detected at the Low side • Short to ground side/ open: When the valve is OFF, the zero voltage is detected at the Low side	
Fail-Safe	Airspring	• Inhibition of the upward leveling	
	CDC damper	• -	

Diagnostic Circuit Diagram

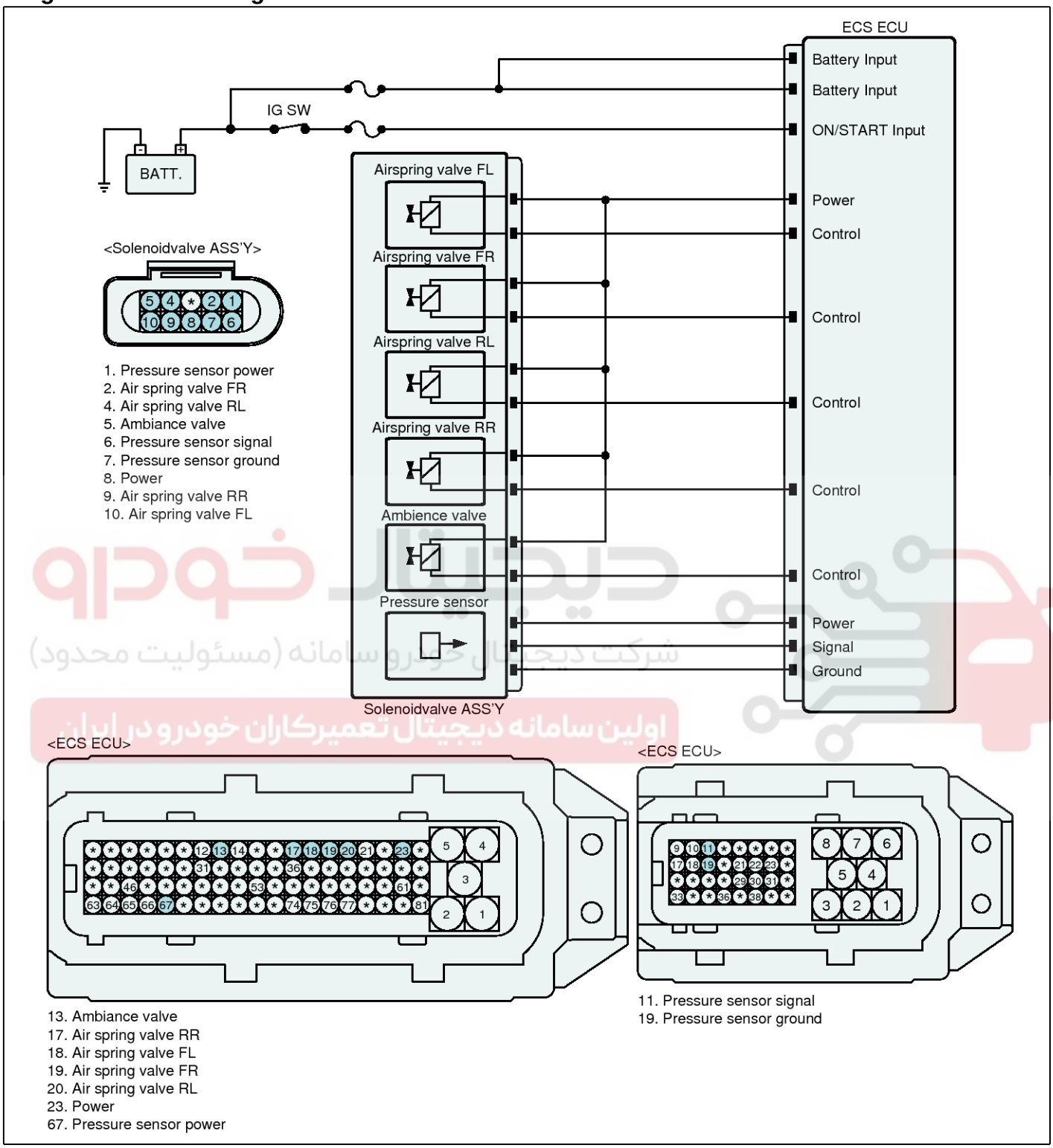

SBHSS9601L

Terminal and Connector Inspection

1. Many malfunctions in the electrical system are caused by poor harness(es) and terminal condition.

   Faults can also be caused by interference from other electrical systems, and mechanical or chemical damage.
2. Thoroughly check connectors for looseness, poor connection, bending, corrosion, contamination, deterioration, or damage.
3. Has a problem been found?

YES ▶ Repair as necessary and then go to "Verification of Vehicle Repair" procedure.

NO ▶ Go to "Power Circuit Inspection" procedure.

Power Circuit Inspection

■ Check for open in harness

1. IG "OFF"
2. Disconnect solenoid valve ASS'Y connector and ECS ECU connector.
3. Measure resistance between power terminal of the solenoid valve ASS'Y harness connector and power terminal of the ECS ECU harness connector.

Specification : Below approx. 1Ω

4. Is the measured value within specification?

YES ▶ Go to "Check for short in harness" procedure.

NO ▶ Repair open in power circuit between ECS ECU and solenoid valve ASS'Y and then, go to "Verification of vehicle Repair" procedure.

■ Check for short in harness

1. IG "OFF"
2. Disconnect solenoid valve ASS'Y connector and ECS ECU connector.
3. Measure resistance between power terminal of the solenoid valve ASS'Y harness connector and chassis ground.

Specification : Infinite

4. Is the measured value within specification?

YES ▶ Go to "Control Circuit Inspection" procedure.

NO ▶ Repair short in power circuit between ECS ECU and solenoid valve ASS'Y and then, go to "Verification of vehicle Repair" procedure.

Control Circuit Inspection

■ Check for open in harness

1. IG "OFF"
2. Disconnect solenoid valve ASS'Y connector and ECS ECU connector.
3. Measure resistance between control terminal of the solenoid valve ASS'Y harness connector and control terminal of the ECS ECU harness connector.

Specification : Below approx. 1Ω

4. Is the measured value within specification?

YES ▶ RGo to "Check for short in harness" procedure.

NO ▶ Repair open in the control circuit between solenoid valve ASS'Y and ECS ECU, go to "Verification of Vehicle Repair" procedure.

■ Check for short in harness

1. IG "OFF"
2. Disconnect solenoid valve ASS'Y connector and ECS ECU connector.
3. Measure resistance between control terminal of the solenoid valve ASS'Y harness connector and chassis ground.

Specification : Infinite

4. Is the measured value within specification?

YES ▶ Substitute with a known-good solenoid valve ASS'Y and check for proper operation. If problem is corrected, replacesolenoid valve ASS'Y and then go to "Verification of Vehicle Repair" procedure.

NO ▶ Repair short in the control circuit between solenoid valve ASS'Y and ECS ECU, go to "Verification of Vehicle Repair" procedure.

Verification of Vehicle Repair

After a repair, it is essential to verify that the fault has been corrected.

1. Connect scantool and select "Diagnostic Trouble Codes(DTCs)" mode
2. Using a scantool, Clear DTC.
3. Operate the vehicle within DTC Detecting Condition in General Information.
4. Using a scantool, Check DTC present.
5. Are any DTCs present ?

YES ▶ Go to the applicable troubleshooting procedure.

NO ▶ System performing to specification at this time.

C2338 Reverse Valve 1 Failure

Component Location

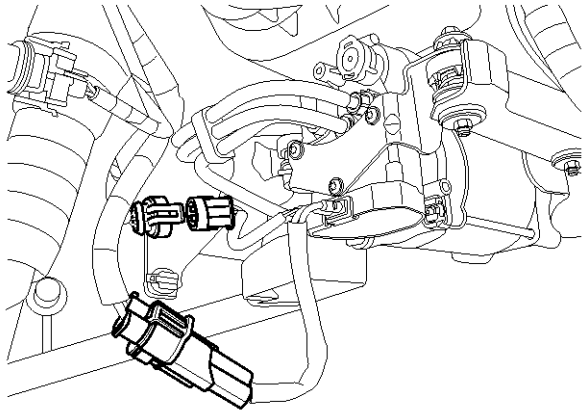

SBHSS8359D

General Description

The ECS is the abbreviation for "Electronic Control Suspension". This ECS system automatically controls the height of a vehicle level and the damping force of shock absorbers according to road condition. So it improves riding comfort and steering stability. When the vehicle leveling is performed, the compressor presses the air and makes it into high-pressure air. And it is supplied to each air-spring or the reservor. And the ECS ECU controls each air-spring valve in order to charge the air into each air-spring.

DTC Description

The ECS ECU checks the reverse valve 1 for a normal operation and if it is detected as a open or short circuit, this DTC is set.

DTC Detecting Condition

Item		Detecting Condition	Possible cause
DTC Strategy		• Monitoring the reverse valve 1	• Open or short in the reverse valve 1 circuit • Faulty reverse valve 1(in the compressor ASSAY)
Threshold value		• Short to battery side: When the valve is ON, the battery voltage is detected at the Low side • Short to ground side/ open: When the valve is OFF, the zero voltage is detected at the Low side	
Fail-Safe	Airspring	• Inhibition of the upward leveling	
	CDC damper	• -	

Diagnostic Circuit Diagram

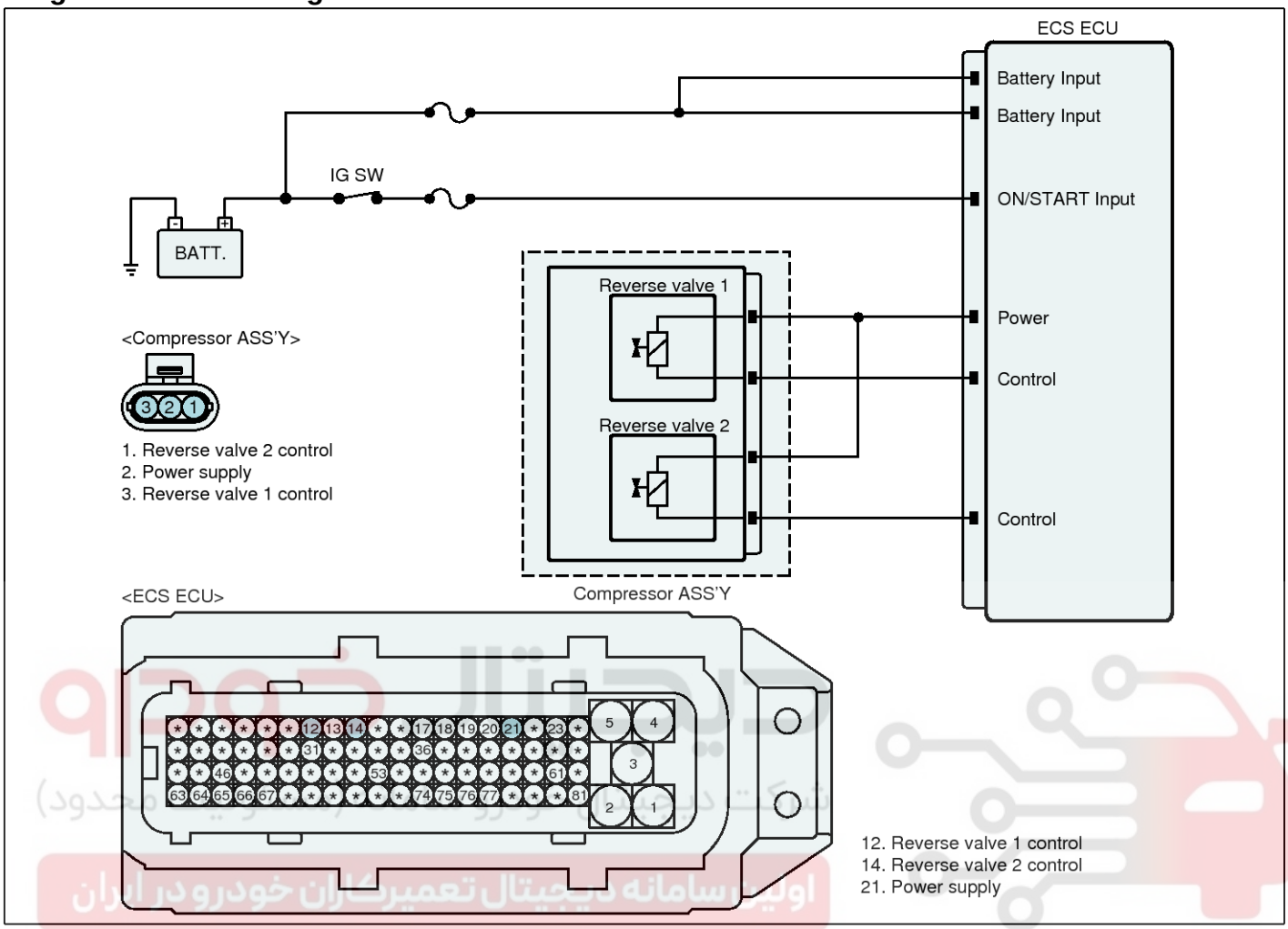

SBHSS9624L

Terminal and Connector Inspection

1. Many malfunctions in the electrical system are caused by poor harness(es) and terminal condition.

   Faults can also be caused by interference from other electrical systems, and mechanical or chemical damage.
2. Thoroughly check connectors for looseness, poor connection, bending, corrosion, contamination, deterioration, or damage.
3. Has a problem been found?

YES ▶ Repair as necessary and then go to "Verification of Vehicle Repair" procedure.

NO ▶ Go to "Power Circuit Inspection" procedure.

Power Circuit Inspection

■ Check for open in harness

1. IG "OFF"
2. Disconnect compressor ASS'Y connector and ECS ECU connector.
3. Measure resistance between power(reverse valve 1) terminal of the compressor ASS'Y harness connector and power(reverse valve 1) terminal of the ECS ECU harness connector.

Specification : Below approx. 1Ω

4. Is the measured value within specification?

YES ▶ Go to "Check for short in harness" procedure.

NO ▶ Repair open in power circuit between ECS ECU and Compressor ASS'Y and then, go to " Verification of vehicle Repair" procedure.

■ Check for short in harness

1. IG "OFF"
2. Disconnect Compressor ASS'Y connector and ECS ECU connector.
3. Measure resistance between power(reverse valve 1) terminal of the Compressor ASS'Y harness connector and chassis ground.

Specification : Infinite

4. Is the measured value within specification?

YES ▶ Go to "Control Circuit Inspection" procedure.

NO ▶ Repair short in power circuit between ECS ECU and Compressor ASS'Y and then, go to " Verification of vehicle Repair" procedure.

Control Circuit Inspection

■ Check for open in harness

1. IG "OFF"
2. Disconnect Compressor ASS'Y connector and ECS ECU connector.
3. Measure resistance between control(reverse valve 1) terminal of the Compressor ASS'Y harness connector and control(reverse valve 1) terminal of the ECS ECU harness connector.

Specification : Below approx. 1Ω

4. Is the measured value within specification?

YES ▶ Go to "Check for short in harness" procedure.

NO ▶ Repair open in the control circuit between Compressor ASS'Y and ECS ECU, go to "Verification of Vehicle Repair" procedure.

■ Check for short in harness

1. IG "OFF"
2. Disconnect Compressor ASS'Y connector and ECS ECU connector.
3. Measure resistance between control(reverse valve 1) terminal of the Compressor ASS'Y harness connector and chassis ground.

Specification : Infinite

4. Is the measured value within specification?

YES ▶ Substitute with a known-good Compressor ASS'Y and check for proper operation. If problem is corrected, replace Compressor ASS'Y and then go to "Verification of Vehicle Repair" procedure.

NO ▶ Repair short in the control circuit between Compressor ASS'Y and ECS ECU, go to "Verification of Vehicle Repair" procedure.

Verification of Vehicle Repair

After a repair, it is essential to verify that the fault has been corrected.

1. Connect scantool and select "Diagnostic Trouble Codes(DTCs)" mode
2. Using a scantool, Clear DTC.
3. Operate the vehicle within DTC Detecting Condition in General Information.
4. Using a scantool, Check DTC present.
5. Are any DTCs present ?

YES ▶ Go to the applicable troubleshooting procedure.

NO ▶ System performing to specification at this time.

C2339 Reverse Valve 2 Failure

Component Location

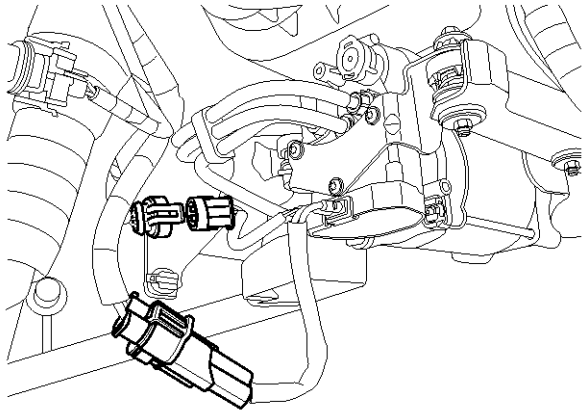

SBHSS8359D

General Description

The ECS is the abbreviation for "Electronic Control Suspension". This ECS system automatically controls the height of a vehicle level and the damping force of shock absorbers according to road condition. So it improves riding comfort and steering stability. When the vehicle leveling is performed, the compressor presses the air and makes it into high-pressure air. And it is supplied to each air-spring or the reservor. And the ECS ECU controls each air-spring valve in order to charge the air into each air-spring.

DTC Description

The ECS ECU checks the reverse valve 2 for a normal operation and if it is detected as a open or short circuit, this DTC is set.

DTC Detecting Condition

Item		Detecting Condition	Possible cause
DTC Strategy		• Monitoring the reverse valve 2	• Open or short in the reverse valve 2 circuit • Faulty reverse valve 2(in the compressor ASSAY)
Threshold value		• Short to battery side: When the valve is ON, the battery voltage is detected at the Low side • Short to ground side/ open: When the valve is OFF, the zero voltage is detected at the Low side	
Fail-Safe	Airspring	• Inhibition of the upward leveling	
	CDC damper	• -	

Diagnostic Circuit Diagram

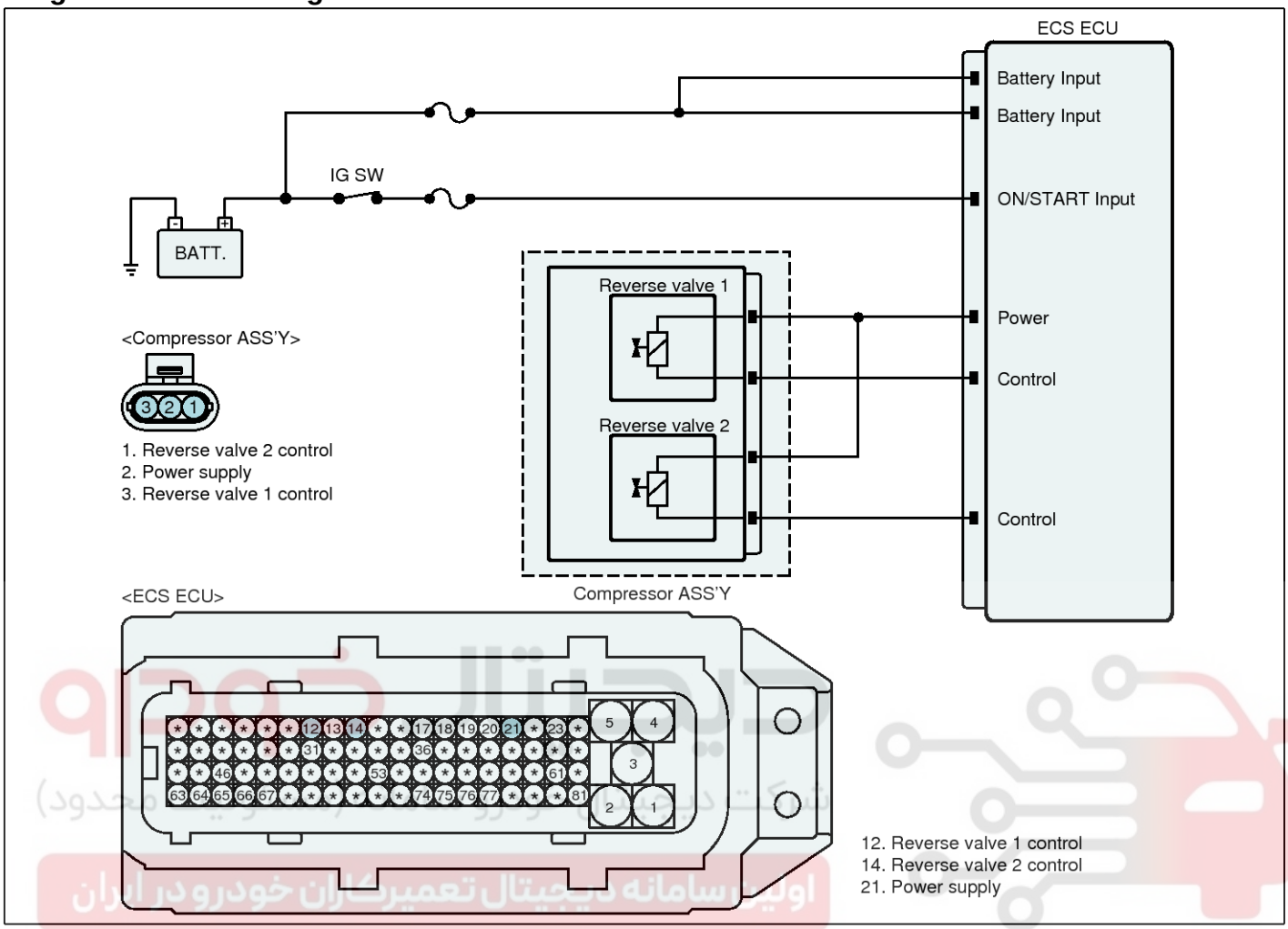

SBHSS9624L

Terminal and Connector Inspection

1. Many malfunctions in the electrical system are caused by poor harness(es) and terminal condition.

   Faults can also be caused by interference from other electrical systems, and mechanical or chemical damage.
2. Thoroughly check connectors for looseness, poor connection, bending, corrosion, contamination, deterioration, or damage.
3. Has a problem been found?

YES ▶ Repair as necessary and then go to "Verification of Vehicle Repair" procedure.

NO ▶ Go to "Power Circuit Inspection" procedure.

Power Circuit Inspection

■ Check for open in harness

1. IG "OFF"
2. Disconnect compressor ASS'Y connector and ECS ECU connector.
3. Measure resistance between power(reverse valve 2) terminal of the compressor ASS'Y harness connector and power(reverse valve 2) terminal of the ECS ECU harness connector.

Specification : Below approx. 1Ω

4. Is the measured value within specification?

YES ▶ Go to "Check for short in harness" procedure.

NO ▶ Repair open in power circuit between ECS ECU and Compressor ASS'Y and then, go to " Verification of vehicle Repair" procedure.

■ Check for short in harness

1. IG "OFF"
2. Disconnect Compressor ASS'Y connector and ECS ECU connector.
3. Measure resistance between power(reverse valve 2) terminal of the Compressor ASS'Y harness connector and chassis ground.

Specification : Infinite

4. Is the measured value within specification?

YES ▶ Go to "Control Circuit Inspection" procedure.

NO ▶ Repair short in power circuit between ECS ECU and Compressor ASS'Y and then, go to " Verification of vehicle Repair" procedure.

Control Circuit Inspection

■ Check for open in harness

1. IG "OFF"
2. Disconnect Compressor ASS'Y connector and ECS ECU connector.
3. Measure resistance between control(reverse valve 2) terminal of the Compressor ASS'Y harness connector and control(reverse valve 2) terminal of the ECS ECU harness connector.

Specification : Below approx. 1Ω

4. Is the measured value within specification?

YES ▶ Go to "Check for short in harness" procedure.

NO ▶ Repair open in the control circuit between Compressor ASS'Y and ECS ECU, go to "Verification of Vehicle Repair" procedure.

■ Check for short in harness

1. IG "OFF"
2. Disconnect Compressor ASS'Y connector and ECS ECU connector.
3. Measure resistance between control(reverse valve 2) terminal of the Compressor ASS'Y harness connector and chassis ground.

Specification : Infinite

4. Is the measured value within specification?

YES ▶ Substitute with a known-good Compressor ASS'Y and check for proper operation. If problem is corrected, replace Compressor ASS'Y and then go to "Verification of Vehicle Repair" procedure.

NO ▶ Repair short in the control circuit between Compressor ASS'Y and ECS ECU, go to "Verification of Vehicle Repair" procedure.

Verification of Vehicle Repair

After a repair, it is essential to verify that the fault has been corrected.

1. Connect scantool and select "Diagnostic Trouble Codes(DTCs)" mode
2. Using a scantool, Clear DTC.
3. Operate the vehicle within DTC Detecting Condition in General Information.
4. Using a scantool, Check DTC present.
5. Are any DTCs present ?

YES ▶ Go to the applicable troubleshooting procedure.

NO ▶ System performing to specification at this time.

C2342 Ambience Valve Failure

Component Location

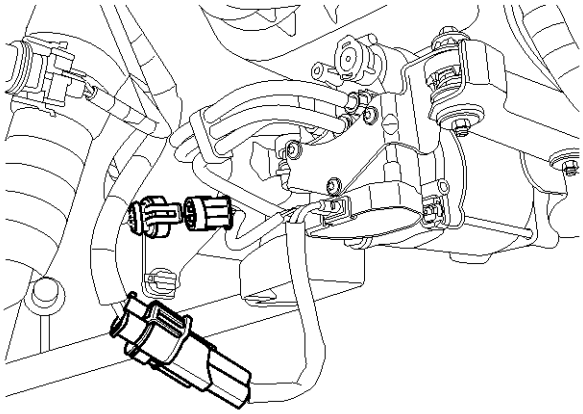

SBHSS8359D

General Description

The ECS is the abbreviation for "Electronic Control Suspension". This ECS system automatically controls the height of a vehicle level and the damping force of shock absorbers according to road condition. So it improves riding comfort and steering stability. When the vehicle leveling is performed, the compressor presses the air and makes it into high-pressure air. And it is supplied to each air-spring or the reservor. And the ECS ECU controls each air-spring valve in order to charge the air into each air-spring.

DTC Description

The ECS ECU checks the ambience valve for a normal operation and if it is detected as a open or short circuit, this DTC is set.

DTC Detecting Condition

Item		Detecting Condition	Possible cause
DTC Strategy		• Monitoring the ambience valve	• Open or short in the ambience valve circuit • Faulty ambience valve (in the solenoid valve ASSAY)
Threshold value		• Short to battery side: When the valve is ON, the battery voltage is detected at the Low side • Short to ground side/ open: When the valve is OFF, the zero voltage is detected at the Low side	
Fail-Safe	Airspring	• Inhibition of the upward leveling	
	CDC damper	• -	

Diagnostic Circuit Diagram

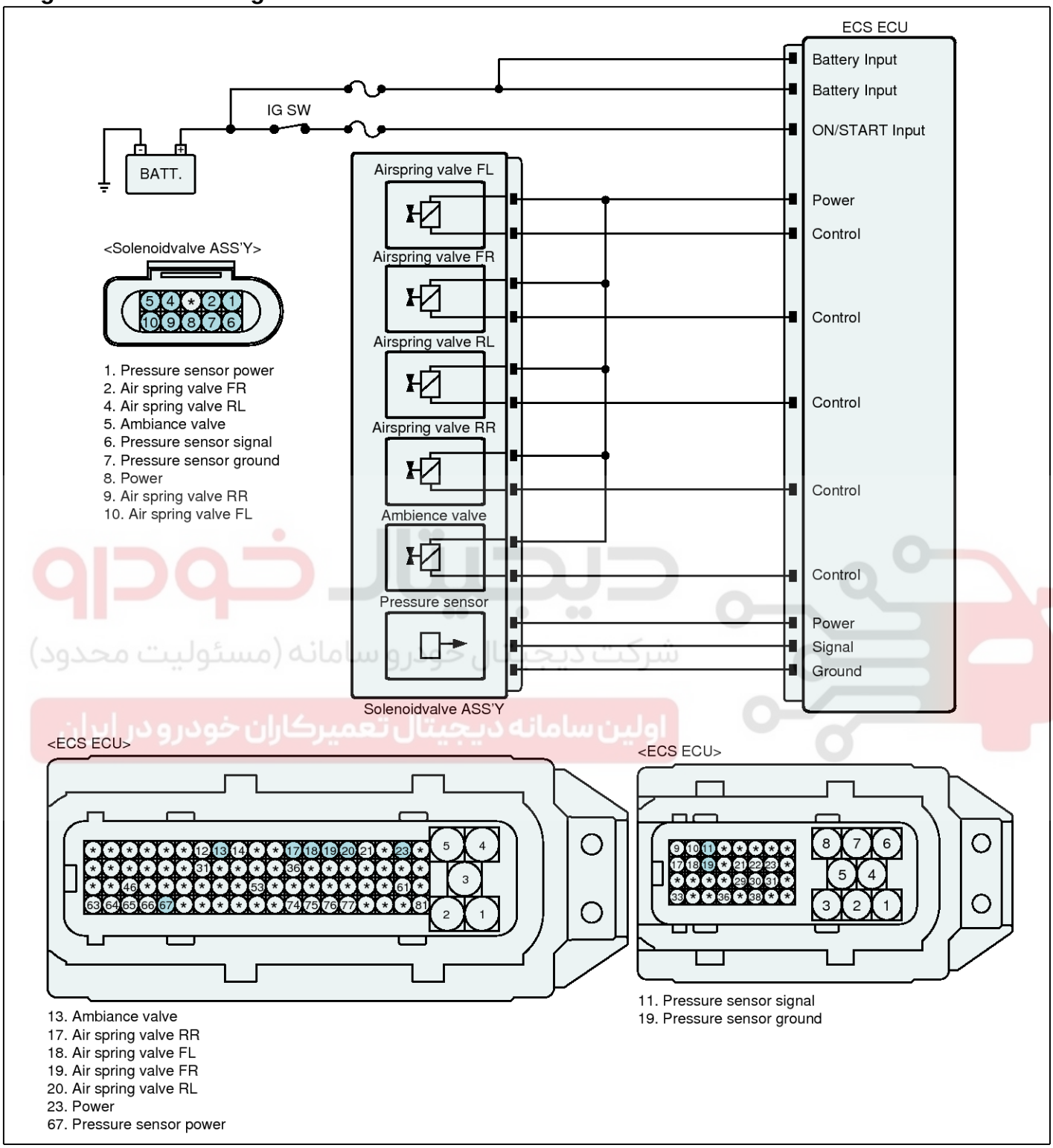

SBHSS9601L

Terminal and Connector Inspection

1. Many malfunctions in the electrical system are caused by poor harness(es) and terminal condition.

   Faults can also be caused by interference from other electrical systems, and mechanical or chemical damage.
2. Thoroughly check connectors for looseness, poor connection, bending, corrosion, contamination, deterioration, or damage.
3. Has a problem been found?

YES ▶ Repair as necessary and then go to "Verification of Vehicle Repair" procedure.

NO ▶ Go to "Power Circuit Inspection" procedure.

Power Circuit Inspection

■ Check for open in harness

1. IG "OFF"
2. Disconnect solenoid valve ASS'Y connector and ECS ECU connector.
3. Measure resistance between power(ambience valve) terminal of the solenoid valve ASS'Y harness connector and power(ambience valve) terminal of the ECS ECU harness connector.

Specification : Below approx. 1Ω

4. Is the measured value within specification?

YES ▶ Go to "Check for short in harness" procedure.

NO ▶ Repair open in power circuit between ECS ECU and solenoid valve ASS'Y and then, go to "Verification of vehicle Repair" procedure.

■ Check for short in harness

1. IG "OFF"
2. Disconnect solenoid valve ASS'Y connector and ECS ECU connector.
3. Measure resistance between power(ambience valve) terminal of the solenoid valve ASS'Y harness connector and chassis ground.

Specification : Infinite

4. Is the measured value within specification?

YES ▶ Go to "Control Circuit Inspection" procedure.

NO ▶ Repair short in power circuit between ECS ECU and solenoid valve ASS'Y and then, go to "Verification of vehicle Repair" procedure.

Control Circuit Inspection

■ Check for open in harness

1. IG "OFF"
2. Disconnect solenoid valve ASS'Y connector and ECS ECU connector.
3. Measure resistance between control(ambience valve) terminal of the solenoid valve ASS'Y harness connector and control terminal of the ECS ECU harness connector.

Specification : Below approx. 1Ω

4. Is the measured value within specification?

YES ▶ Go to "Check for short in harness" procedure.

NO ▶ Repair open in the control circuit between solenoid valve ASS'Y and ECS ECU, go to "Verification of Vehicle Repair" procedure.

■ Check for short in harness

1. IG "OFF"
2. Disconnect solenoid valve ASS'Y connector and ECS ECU connector.
3. Measure resistance between control(ambience valve) terminal of the solenoid valve ASS'Y harness connector and chassis ground.

Specification : Infinite

4. Is the measured value within specification?

YES ▶ Substitute with a known-good solenoid valve ASS'Yand check for proper operation. If problem is corrected, replace solenoid valve ASS'Y and then go to "Verification of Vehicle Repair" procedure.

NO ▶ Repair short in the control circuit between solenoid valve ASS'Y and ECS ECU, go to "Verification of Vehicle Repair" procedure.

Verification of Vehicle Repair

After a repair, it is essential to verify that the fault has been corrected.

1. Connect scantool and select "Diagnostic Trouble Codes(DTCs)" mode
2. Using a scantool, Clear DTC.
3. Operate the vehicle within DTC Detecting Condition in General Information.
4. Using a scantool, Check DTC present.
5. Are any DTCs present ?

YES ▶ Go to the applicable troubleshooting procedure.

NO ▶ System performing to specification at this time.

C2409 Compressor Overtemperature Detected

Component Location

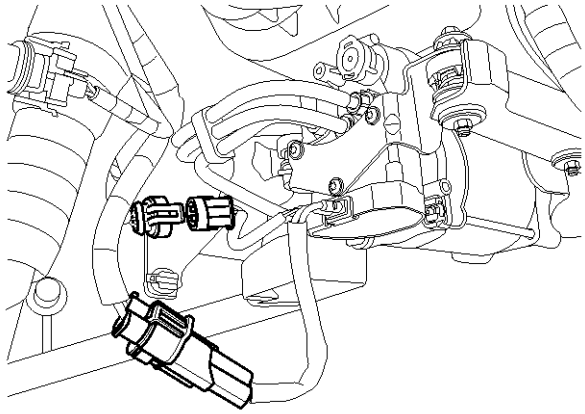

SBHSS8359D

General Description

The ECS is the abbreviation for "Electronic Control Suspension". This ECS system automatically controls the height of a vehicle level and the damping force of shock absorbers according to road condition. So it improves riding comfort and steering stability. When the vehicle leveling is performed, the compressor presses the air and makes it into high-pressure air. And it is supplied to each air-spring. For controlling the compressor, the ECS ECU controls the compressor relay and this relay supplies power to the compressor.

DTC Description

The ECS ECU checks the compressor for a normal operation and if it is detected as a overtemperature, this DTC is set.

DTC Detecting Condition

Item		Detecting Condition	Possible cause
DTC Strategy		• Monitoring the compressor's temperature	• Compressor overtemperature
Threshold value		• when the compressor's temperature is over 140 ℃ for more than 10 seconds	
Fail-Safe	Airspring	• Inhibition of the upward leveling	
	CDC damper	• -	

Component Inspection

1. Wait until the compressor sufficiently gets cold.
2. IG "OFF"
3. IG "ON"
4. After connecting scantool, Check DTC on the scantool.
5. Using scantool, Clear DTC.
6. Again using scantool, Check DTC present.
7. Is the same DTC shown, agian?

YES ▶ The compressor has overheated, After waiting until it gets cold, Go to "Verification of Vehicle Repair" procedure.

NO ▶ This fault is intermittently caused by a overheated compressor due to a frequent leveling.

Go to "Verification of Vehicle Repair" procedure.

Verification of Vehicle Repair

After a repair, it is essential to verify that the fault has been corrected.

1. Connect scantool and select "Diagnostic Trouble Codes(DTCs)" mode
2. Using a scantool, Clear DTC.
3. Operate the vehicle within DTC Detecting Condition in General Information.
4. Using a scantool, Check DTC present.
5. Are any DTCs present ?

YES ▶ Go to the applicable troubleshooting procedure.

NO ▶ System performing to specification at this time.

Tires/Wheels

Tire

Tire Wear

1. Measure the tread depth of the tires.

Tread depth [limit] : 1.6 mm (0.063 in)

2. If the remaining tread(A) depth is less than the limit, replace the tire.

NOTICE

When the tread depth of the tires is less than 1.6 mm (0.063 in), the wear indicators(B) will appear.

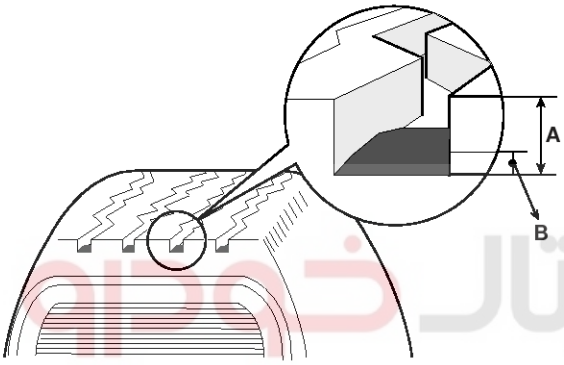

KHRE404A

Tire Rotation

Checking For Pull And Wander

If the steering pulls to one side, rotate the tires according to the following wheel rotation procedure.

1. Rotate the front right and front left tires, and perform a road test in order to confirm vehicle stability.

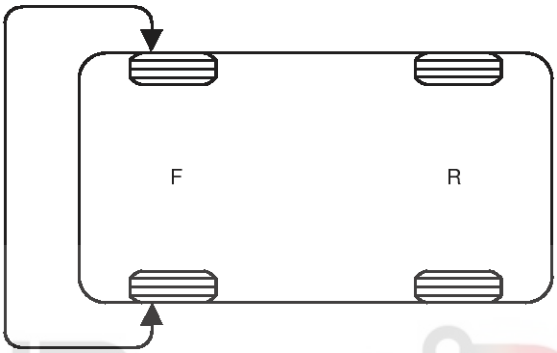

EHRF405B

2. If the steering pulls to the opposite side, rotate the front and rear tires, and perform a road test again.

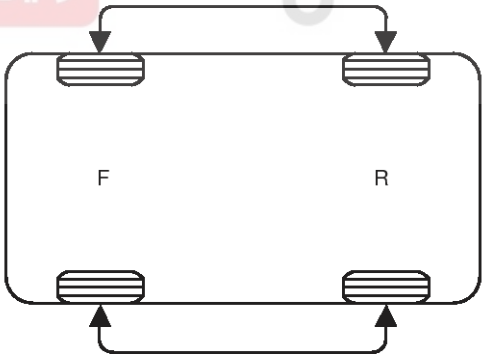

EHRF405C

3. If the steering continues to pull to one side, rotate the front right and left tires again, and perform a road test.

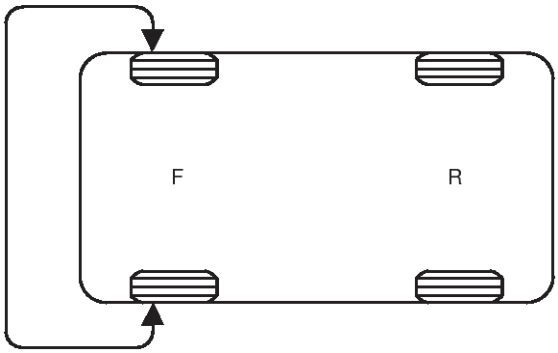

EHRF405B

4. If the steering continues to pull to the opposite side, replace the front wheels with new ones.

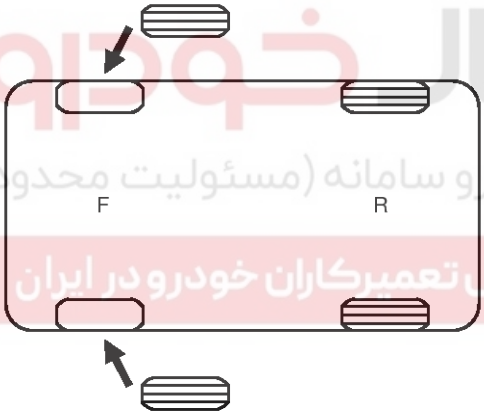

EHRF405E

Wheel

Wheel Alignment

When using commercially available computerized four wheel alignment equipment (caster, camber, toe) to inspect the front wheel alignment, always position the car on a level surface with the front wheels facing straight ahead.

Prior to inspection, make sure that the front suspension and steering system are in normal operating condition and that the wheels and tires face straight ahead and the tires are inflated to the specified pressure.

Toe

Toe is a measurement of how much the front of the wheels are turned in or out from the straight-ahead position.

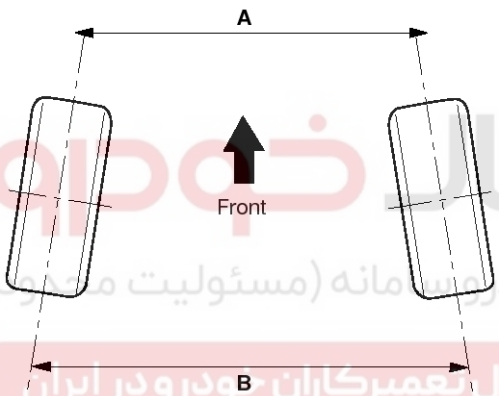

EHRF400A

Item	Description
A - B < 0	Positive (+) toe (toe in)
A - B > 0	Negative (-) toe (toe out)

When the wheels are turned in toward the front of the vehicle, toe is positive (+) (toe in). When the wheels are turned out toward the front of the vehicle, toe is negative(-) (toe out). Toe is measured in degrees, from side to side, and totaled.

[Front]

Toe-in(B-A or angle a+b) is adjusted by turning the tie rod turnbuckles. Toe-in on the left front wheel can be reduced by turning the tie rod toward the rear of the car. Toe- in change is adjusted by turning the tie rods for the right and left heels simultaneously at the same amount as follows.

Standard value :
Toe-in (B-A) mm (in)
Manual : 0.6 ± 1 (0.0236 ± 0.0393)
EAS : 0.6 ± 1 (0.0236 ± 0.0393)

NOTICE

- *Toe-in adjustment should be made by turning the right and left tie rods at the same amount.*
- *When adjusting toe-in, loosen the outer bellows clip to prevent twisting the bellows.*
- *After the adjustment, tighten the tie rod end lock nuts firmly and reinstall the bellows clip.*
- *Adjust each toe-in to be the range of ±1mm.*

Tie rod(A) Specified torque :
50~55N.m (5~5.5kgf.m, 36.2~39.8lb-ft)

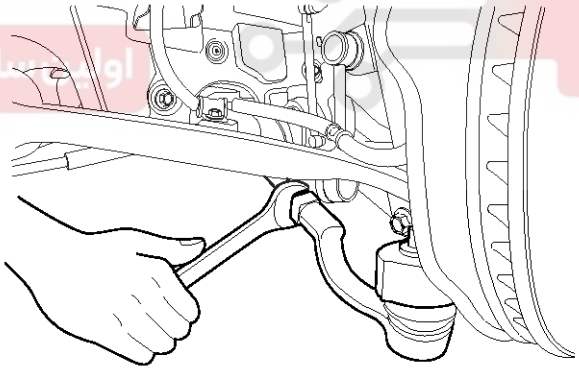

SBHSS9304N

[Rear]

Standard value

Manual : 2.4 ± 1 (0.0944 ± 0.0393)
EAS : 2.4 ± 1 (0.0944 ± 0.0393)

Adjust the toe-in by turning the cambolt of the assist arm.

Left cambolt : Clockwise → toe-in
Right cambolt : Clockwise → toe-out
The variation of toe by a rotation of the cambolt :
About 4.3 mm

CAUTION

- **Each toe should be within 1±1 mm (0.039 ± 0.039 in).**

  If the difference between right and left is not within +2mm (0.079 in), repeat adjustment.
- **After adjusting the cambolt, tighten the nut to the specified torque.**

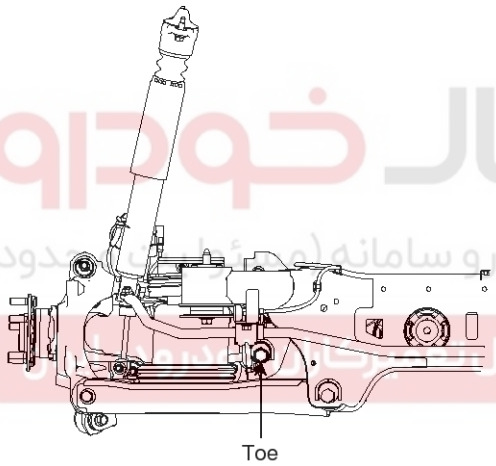

SBHSS9305N

Tightening torque :
110 ~ 120N.m (11 ~ 12kgf·m, 79.5 ~ 86.8lb-ft)

Camber

[Front]

Camber is the inward or outward tilting of the wheels at the top.

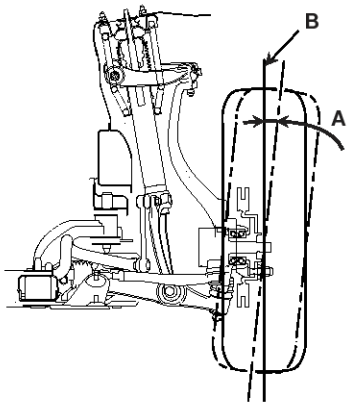

KHBF400C

Item	Description
A	Positive camber angle
B	True vertical

When the wheel tilts out at the top, then the camber is positive (+).

When the wheel tilts in at the top, then the camber is negative(-).

Standard value

Manual : -0.45° ± 0.5°
EAS : -0.53° ± 0.5°

NOTICE

Camber is pre-set at the factory and doesn't need to be adjusted. If the camber is not within the standard value, replace the bent or damaged parts.

[Rear]

Standard value

Manual : -1.37° ± 0.5°
EAS : -1.43° ± 0.5°
Difference between right and left angle is within 0° 30´

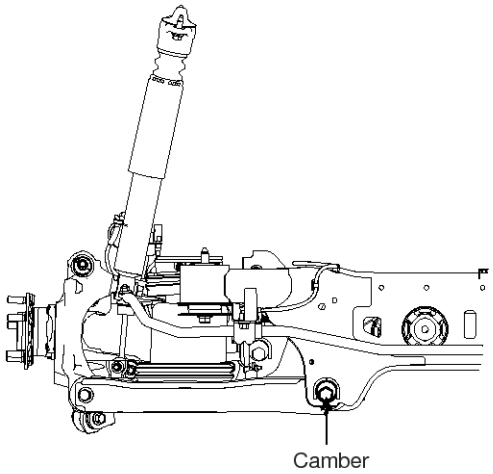

SBHSS9306N

Adjust the camber by turning the cambolt of the rear lower arm.

Left cambolt : Clockwise → camber(+)
Right cambolt : Clockwise →camber(-)
The variation of camber by a rotation of the cambolt :
About 0.2°

Caster

Caster is the tilting of the strut axis either forward or backward from vertical. A backward tilt is positive (+) and a forward tilt is negative (-).

Caster is pre-set at the factory and doesn't need to be adjusted. If the caster is not within the standard value, replace the bent or damaged parts.

Standard value

Manual : 7.63° ± 0.75°
EAS : 7.78° ± 0.75°

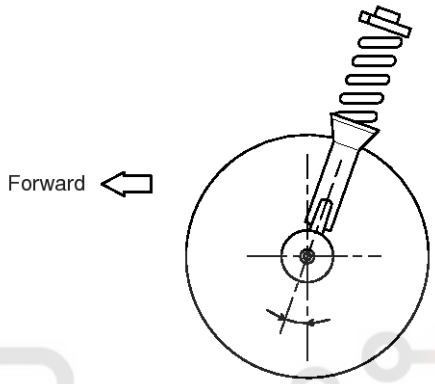

EHOF400C

NOTICE

- *The worn loose or damaged parts of the front suspension assembly must be replaced prior to measuring front wheel alignment.*
- *Caster are pre-set to the specified value at the factory and don't need to be adjusted.*
- *If the caster are not within specifications, replace bent or damaged parts.*
- *The difference of left and right wheels about the the caster must be within the range of 0° ± 30´.*

Wheel Runout

1. Jack up the vehicle and support it with jack stands.
2. Measure the wheel runout with a dial indicator as illustrated.
3. Replace the wheel if the wheel runout exceeds the limit.

Limit		Radial	Axial
Runout mm(in)	Aluminium	0.3	0.3

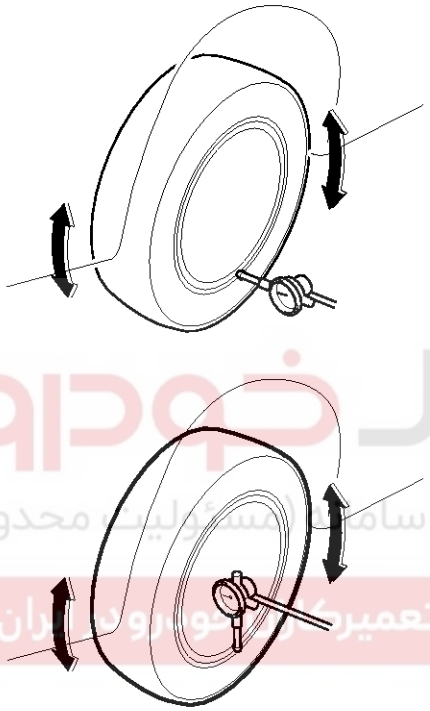

KHRE402A

Wheel Nut Tightening

1. Tightening torque.

Tightening torque :
90 ~ 110N.m (9 ~ 11kgf.m, 65.1 ~ 79.5lb-ft)

⚠CAUTION
When using an impact gun, final tightening torque should be checked using a torque wrench.

2. Tightening order.

   Check the torque again after tightening the wheel nuts diagonally.

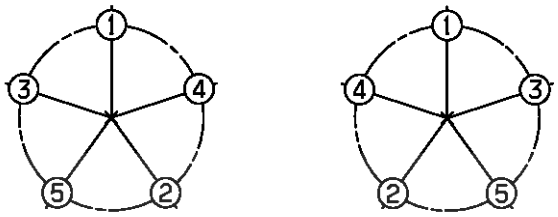

SBHSS8385D